Document Title:	Function Group:	Information Type:	Date:
Caution sign - Fuel	**000**	**Service Information**	**2014/4/2 0**
Profile:			

Caution sign - Fuel

See the lubrication table for the required grade.

Figure 1

Document Title:	Function Group:	Information Type:	Date:
Caution sign - Hydraulic oil	**000**	**Service Information**	**2014/4/2 0**
Profile:			

Caution sign - Hydraulic oil

See the lubrication table for the required grade.

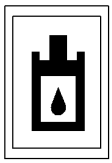

M300010A

Figure 1

CAUTION

If the hydraulic system is filled with biodegradable hydraulic oil from the factory (see sticker on filler neck), only the oil quality specified on the sticker must be used to fill up or when changing the oil.

VOLVO

Construction Equipment

Service Information

Document Title:	Function Group:	Information Type:	Date:
Caution sign - Lashing	**000**	**Service Information**	**2014/4/2 0**
Profile:			

Caution sign - Lashing

Fastening points for transport of the machine.

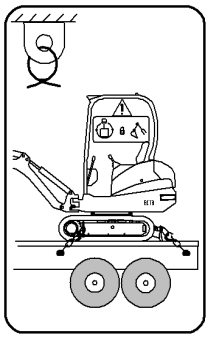

E130010A

Figure 1

VOLVO

Construction Equipment

Service Information

Document Title:	Function Group:	Information Type:	Date:
Caution sign - Loading or Unloading/Lifting	**000**	**Service Information**	**2014/4/2 0**
Profile:			

Caution sign - Loading or Unloading/Lifting

Fastening points for lifting the machine.

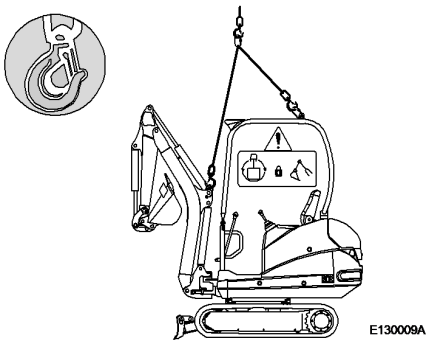

Figure 1

VOLVO

Construction Equipment

Service Information

Document Title:	Function Group:	Information Type:	Date:
Caution sign - Operation and maintenance	**000**	**Service Information**	**2014/4/2 0**
Profile:			

Caution sign - Operation and maintenance

The instructions and warnings in the operating manual must be read carefully before using the machine for the first time. The technical documentation can be found in the storage compartment under the driver"s seat.

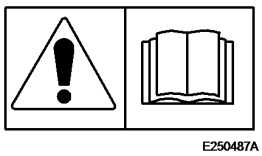

Figure 1

Document Title:	Function Group:	Information Type:	Date:
Caution sign - Sound capacity level	**000**	**Service Information**	**2014/4/2 0**
Profile:			

Caution sign - Sound capacity level

Sound capacity level **(LwA)** around the machine.

E130039A

Figure 1

VOLVO

Construction Equipment

Service Information

Document Title:	Function Group:	Information Type:	Date:
Caution sign - Track tension	**000**	**Service Information**	**2014/4/2 0**
Profile:			

Caution sign - Track tension

It indicates that the tension of the tracks must be checked every day.

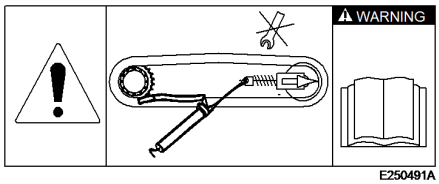

Figure 1

Document Title:	Function Group:	Information Type:	Date:
Identification of the engine	**000**	**Service Information**	**2014/4/2 0**
Profile:			

Identification of the engine

The identification of the engine is stamped on the right hand side of the engine block near the injection pump mounting bracket.

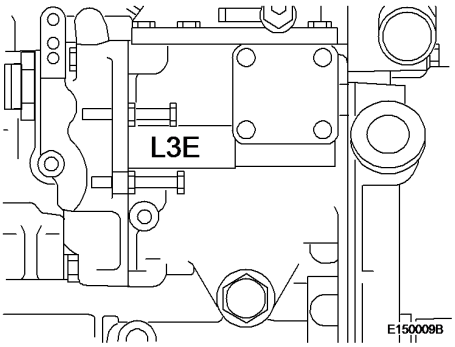

Figure 1

The serial number is stamped on the engine block near the injection pump mounting bracket.

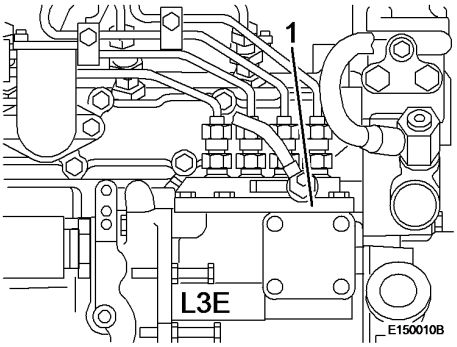

Figure 2
Serial number

VOLVO
Construction Equipment

Service Information

Document Title:	Function Group:	Information Type:	Date:
Machine identification	**000**	**Service Information**	**2014/4/2 0**
Profile:			

Machine identification

The following illustration and description shows which identification plates are on the machine.

When ordering spare parts or in case of enquiries by phone or in writing the model designation and the product identification number (PIN) must be specified.

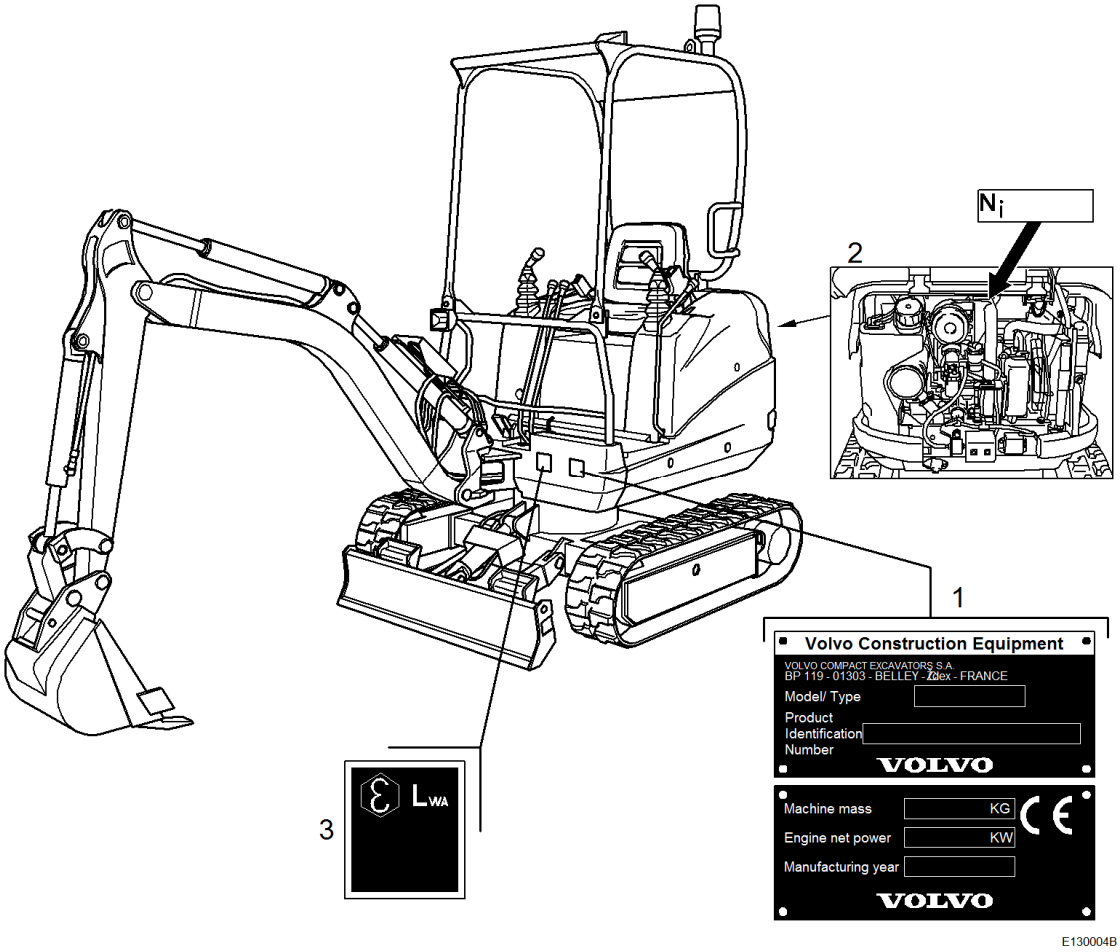

Figure 1
Machine identification

1. Product plate with product identification number (PIN) for the complete machine, model designation, weight of machine, engine power and year of manufacture. The plate is located on the front of the rotating chassis.
2. The identification of the engine is inscribed on the rockerarm cover.
3. Sound capacity level around the machine.

Document Title:	Function Group:	Information Type:	Date:
Position of components	**000**	**Service Information**	**2014/4/2 0**
Profile:			

Position of components

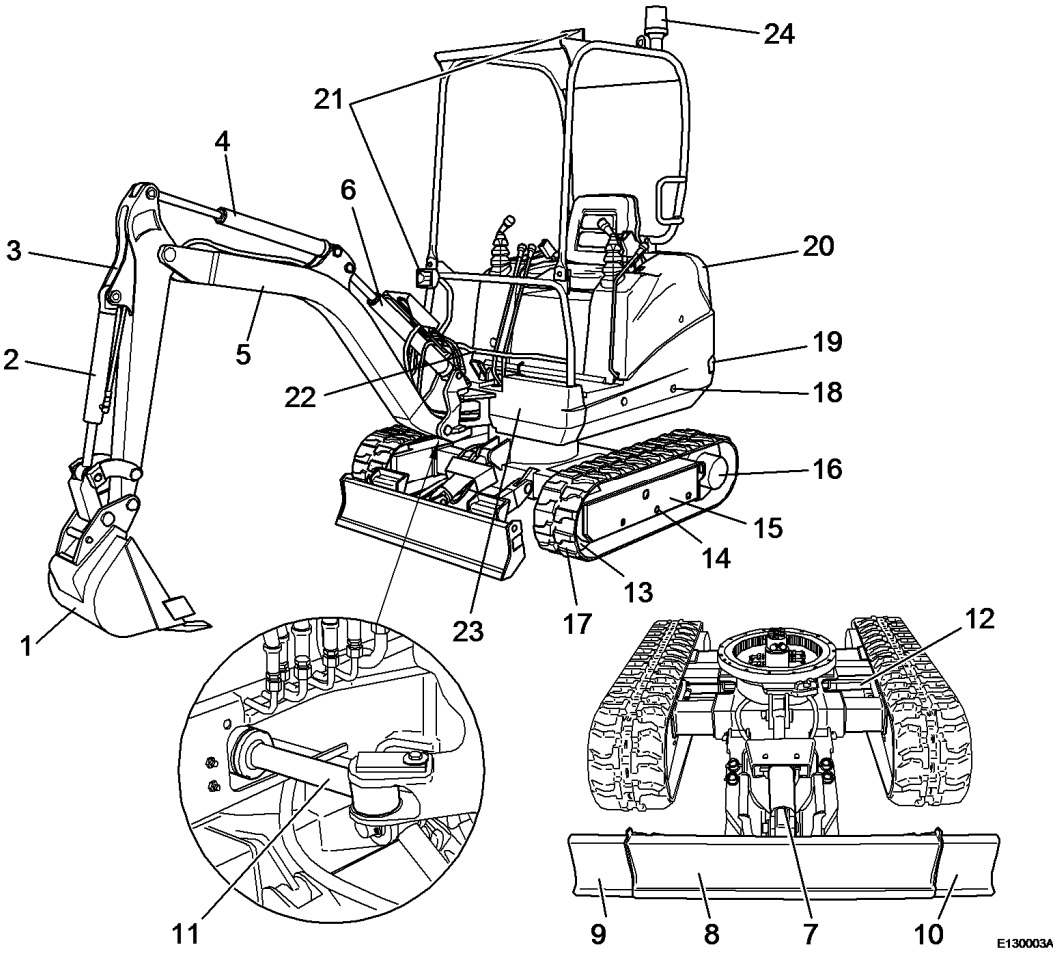

Figure 1
Position of components

1 Bucket
2 Bucket cylinder
3 Dipper, standard version
4 Dipper cylinder
5 Boom
6 Boom cylinder
7 Dozer bladecylinder
8 Dozer blade
9 Dozer blade extension, right (depending on equipment)
10 Dozer blade extension, left (depending on equipment)
11 Boom offset cylinder
13 Tensioning wheel
14 Rollers
15 Main chassis
16 Track sprockets/travel gear motors
17 Tracks
18 Slewing superstructure
19 Counter weight
20 Engine compartment
21 Working headlights
22 Horn
23 Identification plate

12 Cylinder for track width adjustment (only for version XTV)

24 Flashing beacon

Document Title: **Warning and information decals**	Function Group: **000**	Information Type: **Service Information**	Date: **2014/4/2 0**
Profile:			

Warning and information decals

The driver must be acquainted with and observe all warning and information decals, which are attached to the machine.

- Stickers and decals, which are missing or have been damaged, must be immediately replaced.
- Apart from that the decals must be kept in a legible, i.e. clean condition.
- The spare parts number (ordering number) is printed on the respective decal or can be found in the spare parts catalogue.

VOLVO

Construction Equipment

Service Information

Document Title:	Function Group:	Information Type:	Date:
Warning sign - Open engine hood only with engine stopped	**000**	**Service Information**	**2014/4/2 0**
Profile:			

Warning sign - Open engine hood only with engine stopped

Due to the risk of injury by rotating parts it is dangerous to open the engine hood while the engine is running.

E250488A

Figure 1

VOLVO

Construction Equipment

Service Information

Document Title:	Function Group:	Information Type:	Date:
Warning sign - Safety distance from the movement area	**000**	**Service Information**	**2014/4/2 0**
Profile:			

Warning sign - Safety distance from the movement area

This sticker indicates that a sufficient safety distance to the movement zone of the excavator arm must be maintained, in order to rule out any danger of injury.

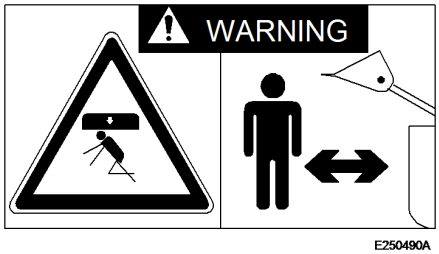

Figure 1

VOLVO

Construction Equipment

Service Information

Document Title:	Function Group:	Information Type:	Date:
Warning sign - Safety distance from the work area	**000**	**Service Information**	**2014/4/2 0**
Profile:			

Warning sign - Safety distance from the work area

It shows that a sufficient safety distance to the action range of the machine must be maintained to avoid injury.

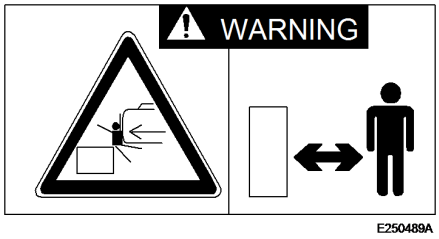

Figure 1

Document Title:	Function Group:	Information Type:	Date:
Electrical system	**030**	**Service Information**	**2014/4/2 0**
Profile:			

Electrical system

System voltage	12 V

Battery	
Quantity	1 unit
Battery disconnecting switch (ground connection)	Connection to negative pole
Voltage	12 V 44 Ah

Starter	
Designation	M2T50381
Type	Displacement by means of electro-magnet CC (with reduction gear)
Rated power, V - kW	12 - 1.6

Alternator	
Designation	AOT25171/AOT25371
Type	IC
Rated power V - A	12 - 40

Glow plug	
Designation	Y-145T
Type	with sheath
Rated voltage V	10.5
Current drain A	9.7 ± 1.0 (30 seconds at rated voltage)

Glow plug relay	
Designation	G71SP
Rated voltage V	12 V DC
Continuous rated power	1 minute
Coil resistance	13

Control clock	
Designation	YM-1C
Input voltage range	9 V-15 V DC
Load	Electro-magnet (coil resistance: min. 1.7)

Electrical system

Electro-magnet with key switch-off key	
Designation	YMS-1
Type	Solenoid

Coil resistance	1.6 ± 10% at 20 °C
Stroke, mm	10 ± 0.5
Battery voltage, V	9 V-15 V DC

Pre-heating relay	
Designation	G7 1SP
Rated voltage, V	12 V DC
Continuous power	rpm
Coil resistance	13Ω
Inductance	24 mH (at 1 kHz)

Document Title:	Function Group:	Information Type:	Date:
Engine	**030**	**Service Information**	**2014/4/2 0**
Profile:			

Engine

Tightening torques	**Nm**
Socket head cap screw M10	78 ± 5
Socket head cap screw M8	24,3 ± 5
Rocker cover bolt	11,3 ± 1.5
Screw of rocker arm bracket	18 ± 3.4
Thermoswitch	22 ± 3.9
Crankshaft pulley nut	107 ± 9.75
Main bearing cap bolt	51.5 ± 2.5
Connecting rod cap nut	33 ± 1.5
Rear plate bolt	93 ± 10
Flywheel bolt	132 ± 5
Screw for cast iron oil sump	27.5 ± 3
Oil pan drain plug	44 ± 5
Pressure relief valve	49 ± 5
Oil filter	12 ± 1
Oil pressure switch	10 ± 2
Fuel injection pipe nut	29 ± 5
Fuel leak-off pipe nut	27 ± 2.5
Delivery valve holder	44 ± 5
Fuel injection nozzle holder	54 ± 5
Hold-down nut for injection nozzle	37 ± 2,5
Sliding sleeve shaft	35 ± 6
Special nut for torque spring set	20 ± 5
Glow plug	17.2 ± 2.5
Nut for glow plug cable	1.2 ± 0.2
Stop solenoid nut	44 ± 5
Starter B terminal	10.8 ± 1
Nut for rocker arm cover	5.8 ± 1
Injection nozzle holder	54 ± 5
Hold-down nut for injection nozzle	37 ± 2.5
Banjo bolt for injection pump	12 ± 5
Injection pump drain plug	5.8 ± 1
Screw for sheet steel oil sump	11.3 ± 1.5
Bolt for stop plate	10.8 ± 1

Document Title:	Function Group:	Information Type:	Date:
Engine	**030**	**Service Information**	**2014/4/2 0**
Profile:			

Engine

Type	**EC13XR/XTV**
Engine	L3E-64ESA
Working principle	Four stroke inline diesel engine, water cooled
Firing sequence (injection sequence)	1 - 3 - 2
Compression ratio	23 : 1
Type of combustion chamber	Swirl chamber
Weight, kg	125
Number of cylinders	3
Bore x stroke, mm	76 x 70
Displacement, cm3	952
Compression pressure	32 bar
Max. permissible pressure deviation between cylinders	3 bar
Idle speed	1050 + 40 rpm
Full speed	2300 ± 20 rev./min
Installed net power (ISO 9249)	11.1 kW at 2150 rpm
Maximum torque	50 kW at 1800 rpm
Cooling	Centrifugal water pump with temperature control
Air filter	Dry

Valve system	
Valve clearance (warm or cold engine)	
Intake valve	0.25 mm
Exhaust valve	0.25 mm

Lubrication system	
Type	Forced feed (by cycloidic pump)
Oil pressure	3.45 ± 0.5 bar
Oil filter	Paper element (full-flow)

Fuel lift pump	
Type	Electrical (diaphragm)
Power at 220 °C and a terminal voltage of 12 V DC	300 cm3/min minimum or 400 cm3/min maximum

Engine

Injection pump	
Type	Series injection pump
Manufacturer	Bosch NC

Designation	ND-PFR3M
Piston diameter	6.0 mm
Injection delay, degree	4
Pressure valve, type	Silto or Bosch
Bleeding screw	yes

Injection nozzle	
Type	Throttle pin injection nozzle
Designation	DN 15 PD6
Injection pressure (opening pressure of valve)	140 ± 5 bar

Cooling system

Engine model		**L3E-64ESA**
Fan belt		Type LL or HM (width = 10.7 mm, angle V = 38°, outer circumference = 980 mm)
Cooling fan	Pressure fan	Number of blades = 5, Diameter = 320 mm
Water pump		Centrifugal pump
Thermostat	Opening temperature of valve	82 ± 1.5 °C
	Temperature at which the valve stroke is 8 mm	95 °C
Thermoswitch	Type	Bi-metal
	Temperature at which the thermoswitch is set to ON	111 ± 3.5 °C
	Temperature difference for SWITCHING ON/OFF	8 ± 3.5 °C
Resistance in temperature sensor		50 °C: 80 ± 10 Ω 80 °C: 29.5 ± 2.5 Ω 120 °C: 10 ± 0.3 Ω

VOLVO
Construction Equipment

Service Information

Document Title:	Function Group:	Information Type:	Date:
Fuels, lubricants and filling capacities (litres)	**030**	**Service Information**	**2014/4/2 0**
Profile:			

Fuels, lubricants and filling capacities (litres)

Only fuels and lubricants complying with the listed specifications may be used.

Tank	**Fluid**	**Ambient temperature**									
		-22 -30	-4 -20	14 -10	32 0	50 10	68 20	86 30	104 40	122 °F 50 °C	Filling capacity
Engine oil sump with oil filter	Engine oil					**SAE 30**					3.6 l
				SAE 10W							
		*		**SAE 10W-30**							
					SAE 15W-40						
									SAE 40		
Hydraulic oil tank	Hydraulic oil			**ISO-VG 32**							17.5 l
		*			**ISO-VG 46**						
						ISO-VG 68					
Chain gear, left	Gear oil	**SAE 80W-90 and API GL5**									0.33 l
Chain gear, right											0.33 l
Fuel tank	Diesel oil	**ASTM D975 No. 1**									18 l
					ASTM D975 No. 2						
Live ring	Grease	*									
		MULTI-PURPOSE #2									-

Document Title:	Function Group:	Information Type:	Date:
Gear motor for slewing	**030**	**Service Information**	**2014/4/2 0**
Profile:			

Gear motor for slewing

Tightening torque	**Nm**
Socket head cap screw - housing	75...80

Document Title:	Function Group:	Information Type:	Date:
Hydraulic motor 1 - travel system	**030**	**Service Information**	**2014/4/2 0**
Profile:			

Hydraulic motor 1 - travel system

Tightening torque	**Nm**
Plug - spool	46...51
Plug control element	12...23
Socket head cap screw - housing	23...25

Document Title:	Function Group:	Information Type:	Date:
Hydraulic system	**030**	**Service Information**	**2014/4/2 0**
Profile:			

Hydraulic system

Technical data EC13

Hydraulic pump

Machine	**XR**	**XTV**
Bucket cylinder	16/20 l/min	
Boom cylinder	18/14 l/min	
Travel movement left/right	26 l/min.	
Dipper cylinder	22/18 l/min	
Optional equipment	35 l/min.	
Rotation	12 l/min.	
Displacement	12 l/min.	
Dozer blade cylinder	12/16 l/min	
Track width extension	-	12/ 16 l/min.

Operating pressure hydraulic circuit

Machine	**XR**	**XTV**
Rotation/dozer blade	150 bar	
Bucket/boom/arm/travel system/attachments/dozer blade	155 bar	

Secondary pressure

Machine	**XR**	**XTV**
Boom	200 bar	
Dipper	230 bar	

Document Title:	Function Group:	Information Type:	Date:
Mechanical transmission - track gearbox	**030**	**Service Information**	**2014/4/2 0**
Profile:			

Mechanical transmission - track gearbox

Tightening torque	**Nm**
Plug on cover	46...51
Plug on cover	12...13

Document Title:	Function Group:	Information Type:	Date:
Plugs with tapered thread	**030**	**Service Information**	**2014/4/2 0**
Profile:			

Plugs with tapered thread

Size	**For aluminium alloys Nm**	**For ferrous metals Nm**
NPTF 1/16	6,4 ± 1	10 ± 2
PT 1/8	10 ± 2	18 ± 3
PT 1/8 NPTF 1/4	10 ± 2	39 ± 5
PT 3/8	-	64 ± 10

Document Title:	Function Group:	Information Type:	Date:
Power Transmission	**030**	**Service Information**	**2014/4/2 0**
Profile:			

Power Transmission

Travel system		
Type		**EC13**
Travel speed: slow/fast	XR	2 km/h
	XTV	2/3.1 km/h
Max. traction power		
Gradability		58% (30°)
Permissible inclination and cross-slope (50% of the tipping limit)	XR	17,6% (10°)
	$XTV_{min.}$	20% (11°)
	$XTV_{max.}$	31% (17°)

Slewing system	
Type	**EC13**
Speed of slewing movement	9 rev./min

Document Title:	Function Group:	Information Type:	Date:
Strength class 8.8 Metric coarse and fine threads	**030**	**Service Information**	**2014/4/2 0**
Profile:			

Strength class 8.8 Metric coarse and fine threads

Thread	**Nm**
M6	10 ± 2
M8	24 ± 5
M10	48 ± 10
M12	85 ± 18
M14	140 ± 25
M16	220 ± 45
M20	430 ± 85
M24	740 ± 150

Document Title:	Function Group:	Information Type:	Date:
Strength class 10.9 Metric coarse and fine threads	**030**	**Service Information**	**2014/4/2 0**
Profile:			

Strength class 10.9 Metric coarse and fine threads

Thread	**Nm**
M6	12 ± 2
M8	30 ± 5
M10	60 ± 10
M12	105 ± 20
M14	175 ± 30
M16	275 ± 45
M20	540 ± 90
M24	805 ± 160

Document Title:	Function Group:	Information Type:	Date:
UNC-threads, coarse pitch	**030**	**Service Information**	**2014/4/2 0**
Profile:			

UNC-threads, coarse pitch

Thread	**Nm**
1/4""	9 ± 2
5/16""	18 ± 4
3/8""	33 ± 8
7/16""	54 ± 14
1/2""	80 ± 20
9/16""	120 ± 30
5/8""	170 ± 40
3/4""	300 ± 70
7/8""	485 ± 115
1""	725 ± 175

Document Title:	Function Group:	Information Type:	Date:
Volvo standard tightening torques	**030**	**Service Information**	**2014/4/2 0**
Profile:			

Volvo standard tightening torques

The tightening torques in the following tables apply for screw connections of the corresponding strength class.
If not specified differently, the tables are to be considered as general instructions for the tightening of screw connections.

NOTE!
For flange bolts of type U6FS the values must be increased by 10%. Screws and nuts must be clean and oiled.

Many thanks for your purchase.
Happy every day.

Document Title:	Function Group:	Information Type:	Date:
General safety measures	**191**	**Service Information**	**2014/4/2 0**
Profile:			

General safety measures

WARNING

In order to assure safety the following instructions must be followed.

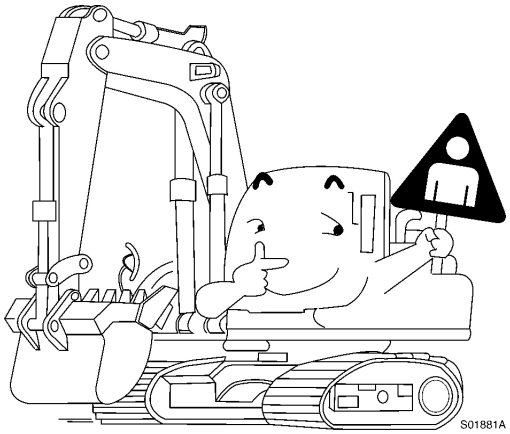

Figure 1
Comply with the safety regulations

Safety precautions

- The machine must generally be operated and serviced by trained and experienced personnel.
- Carefully read the operating instructions and the repair manual before starting operation or service work. Read all safety notes on the safety decals on the machine.

Safety equipment

- Make sure that all guards, protections and covers are correctly installed. Damaged parts must be repaired or replaced.
- Use safety barriers and belts in a correct way.

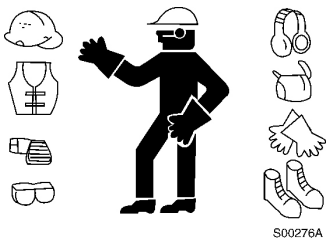

Figure 2
Wear appropriate clothes when performing welding work.

Safety clothes and hard hat

- Use the specified protective clothes in a correct way.
- Wear the specified protective outfit (hard hat, safety goggles, boots, mask, gloves).

Protect yourself against flying metal pieces and similar. Wear protective goggles, gloves and hard hat.
Welding work must only be performed by specially trained and experienced welders.
During welding work you should always wear protective gloves, apron, goggles, safety hood and other protective outfit specified for this kind of work.

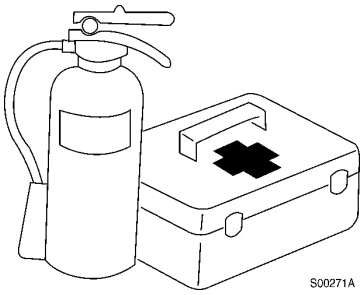

Figure 3
Preparations for emergencies

Preparations for emergencies

- Find the location of fire extinguishers and learn how to use them.
- Make sure that there is a first aid kit and a eye rinsing facility near the work place.
- Attach the phone numbers of physicians, emergency service, hospitals and fire brigade to the phone.

Figure 4
Avoid fire

Safe handling of fluids - avoidance of fire

- Fuels are easily inflammable. Handle with care.
- Smoking or the use of open fire is strictly prohibited when refuelling.
  Always shut the engine down before refuelling. Fill in fuel only outdoors.
- Store combustible fluids only in fire protected places. Pressure vessels must not be burned or perforated.

Figure 5
Do not let any oil flow on the ground

Correct disposal of fluids

- Inattentive spilling of fluids may harm the environment. Before draining off any fluids consult the responsible

authorities for advice on proper disposal.

- Always drain fuel, oil or other fluids into suitable vessels. Do not use any beverage bottles or similar, because someone might accidentally drink these fluids. Wipe off spilled fluids immediately.
- Do not spill any oil on the ground, into a sewer or in a river. Dispose of oil, fuel, coolant, brake fluid, filters, batteries and other hazardous waste in compliance with official environmental regulations.

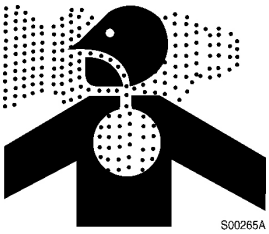

Figure 6
Avoid breathing in dust

Avoid harmful asbestos dust

- Avoid to breath in the dust arising when handling asbestos containing components. Inhaled asbestos fibres can cause lung cancer.

VOLVO
Construction Equipment

Service Information

Document Title:	Function Group:	Information Type:	Date:
Preparations for work	**191**	**Service Information**	**2014/4/2 0**
Profile:			

Preparations for work

Warning of service work

- Unexpected machine movements can cause serious accidents.
- Before starting any work on the machine attach a warning sign reading "OUT OF ORDER" to the right hand control lever.
- Always cooperate with your partner if certain procedures require a second person.

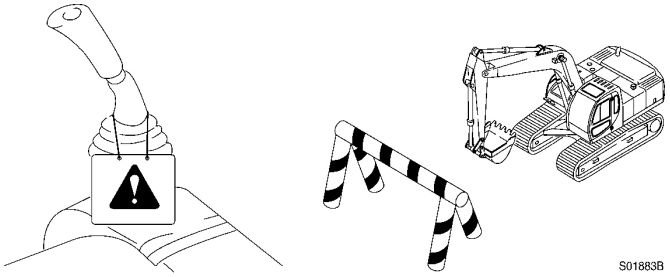

Figure 1
Warn others when performing work

- Always operate the travel alarm before starting to drive the machine, even if a sign "OUT OF ORDER" has been attached before.

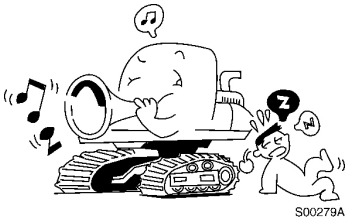

Figure 2
Travel alarm

- Make sure your working area is adequately lit. Use a safety hand lamp inside or under the machine. The lamp must be protected by a wire basket. The hot filament of a broken light bulb can ignite spilled oil or gasoline

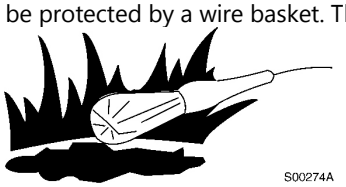

Figure 3
The hot filament of a broken light bulb can ignite spilled oil or gasoline

Correct use of tools

- Usye tools only for the intented purpose

Figure 4
Use tools in a safe way

- Maintain all tools in mint condition and use them correctly.
- In the workshop specify a place to store tools and disassembled parts.

- Always keep the work place clean and tidy and make sute that the floor is free of dirt and oil.

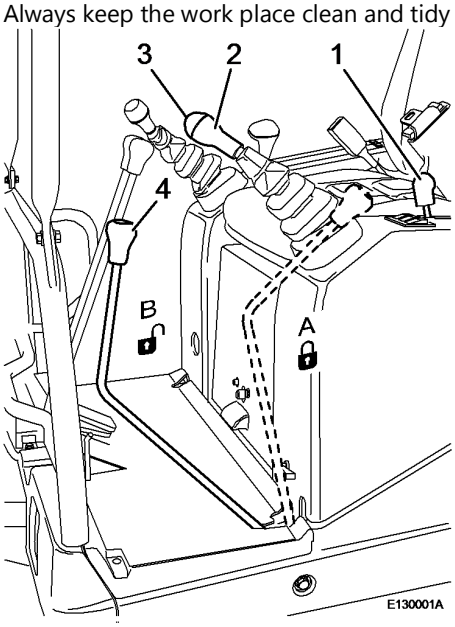

Figure 5
Moving the safety interlock lever to position "LOCKED"

- Always park the machine on firm, level ground before filling up oil or performing any repairs. Secure wheels or tracks with wooden blocks to avoid unintended moving of the machine.
- Before starting work lower dozer blade, bucket, ripper or other equipment on the ground. Should this not be possible install the safety bolt and support the working attachment against dropping down.
- Shut the engine DOWN, pull off the key and shift the safety interlock lever to position "LOCKED" before leaving the operator's stand.

Use handles and access steps

- Do not jump onto or off the machine.

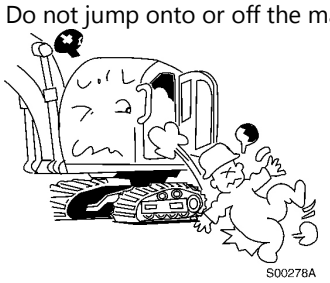

Figure 6
Do not jump onot or off the machine

- When leaving or mounting the machine stand towards the machine and use handles and access steps so that you are always safe with both feet and one hand or one foot and both hands. Do not hold on to any control levers.

- Keep access steps and handles free of dirt and oil.

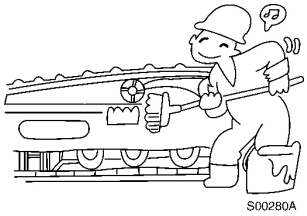

Figure 7
Keep access steps and handles free of dirt and oil.

VOLVO
Construction Equipment

Service Information

Document Title:	Function Group:	Information Type:	Date:
Safe operation of the machine	**191**	**Service Information**	**2014/4/2 0**
Profile:			

Safe operation of the machine

- Only the driver is permitted inside the cabin. Driving as a passenger is prohibited.

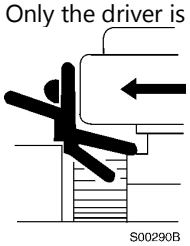

Figure 1
Use the travel alarm before setting off

- Check for any persons in the vicinity before setting off with the machine or operating the working attachment.
- Make sure that the travel alarm is always functioning.
- Ask a second person for assistance when moving the machine in crowds of people.
- Check the travel direction before setting off. Especially when driving backwards make sure that the area behind the machine is free of people. Use the travel alarm before setting off.

- Contact with high voltage power lines can cause severe or even fatal injuries. Always keep a specified safety distance between machine parts or loads and high voltage power lines.

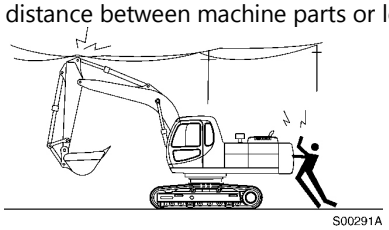

Figure 2
Do not contact high voltage power lines with the machine

- Further details can be found in the operating instructions.

VOLVO

Construction Equipment

Service Information

Document Title:	Function Group:	Information Type:	Date:
Safety is everybody"s concern!	**191**	**Service Information**	**2014/4/2 0**
Profile:			

Safety is everybody"s concern!

The instructions in the operating manual for the machine must always be observed.

The operating manual should always kept within easy reach inside the cabin of the machine.

Highest requirements on performance and safety were focal points during the development of the machine. However, the possible safety level is considerably reduced if the personnel responsible for maintenance of the machine does not read or observe the applicable instructions, i.e. does not reassemble any protective installations, climbs on slippery machine parts instead of using a ladder, uses hoses as hand grips or inappropriate tools for the work to be performed.

In order to assure reliable and powerful function of the machine use only (original) spare parts intended and, in many cases, specially developed for the machine.

The machine hardly ever is the cause of an accident, these are frequently caused by the user.

A safety conscious user and a well serviced machine make a reliable, powerful and profitable combination.

Whoever neglects safety instructions and warnings in this manual must make sure that his working method is safe. Otherwise there is a danger of severe accidents - in worst cases even with fatal results.

WARNING

WARNING SYMBOL

This symbol, which appears at various places in the manual in combination with a warning text, means "Attention! Your safety is concerned!"

Become acquainted with the working capacity and the limits of your machine!

Document Title:	Function Group:	Information Type:	Date:
Safety measures during operation	**191**	**Service Information**	**2014/4/2 0**
Profile:			

Safety measures during operation

Safe cooling system maintenance

- Hot coolant can cause scalding. Let it cool down.
- Open the radiator cap slowly to relieve the pressure. Do not open the cap if the engine has overheated.

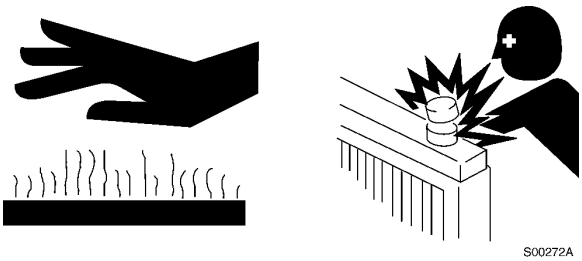

Figure 1
Hot coolant can cause scalding.

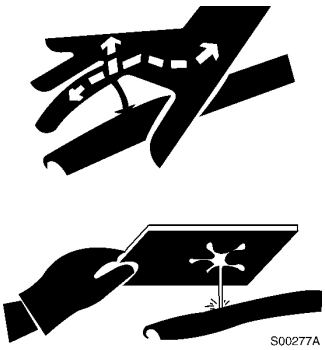

Figure 2
Fluids under high pressure

Fluids under high pressure

- Escaping fluids can be under high pressure and cause severe skin injury.
- This risk can be avoided by relieving the pressure before disconnecting any hydraulic hoses or other lines. Tighten all connections before pressurizing.
- Use a piece of cardboard to check for leaks. Protect hands and body against high pressure fluids.
- Take care not to bend or damage high pressure lines.
  A high pressure oil jet can cause fire.

Lifting of heavy machine parts

- Use appropriate lifting gear or a crane to lift heavy machine parts.
- Rope loops, chains and hooks must be in perfect condition.
- The equipment used must be of sufficient load bearing capacity. Attach the lifting tackle at the right points.
- Operate the lifting device slowly to avoid hitting with the lifted part against any other objects.
- During disassembly or assembly the machine must be secured with trestles, lifting gear or supports.

- Before starting work lower dozer blade, bucket, ripper or other equipment on the ground.
- Do not work under the machine if it is not properly and safely supported.

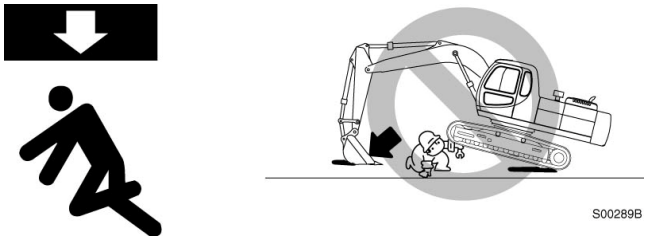

Figure 3
Support the working attachment safely

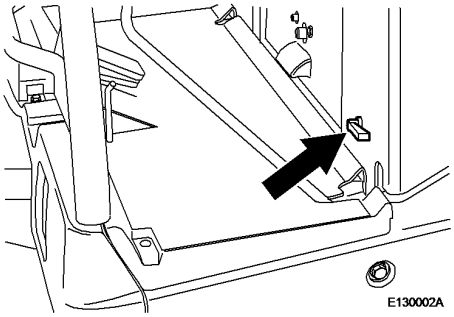

Figure 4
ALWAYS switch the battery disconnecting switch OFF

Electrical system

- During welding work or work in the electrical system of the machine the battery disconnecting switch must ALWAYS be switched OFF or the ground cable (-) must be disconnected from the battery.
- When removing parts take care not to damage any electrical cables. Damaged insulations can cause fire in wiring looms.
- Wear goggles when working on the battery.
- Sulphuric acid in the battery is toxic and strong enough to penetrate through clothes and burn the skin and, when squirted into the yes, may even cause blindness. If battery acid has come in contact with clothes or skin wash off immediately with lots of water.
- If battery acid has squirted into the eyes, rinse out with clear water and consult a physician.
- Keep spark, burning matches and open fire away from the battery. The battery gas (hydrogen) may explode.

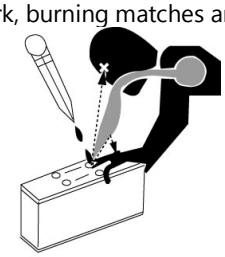

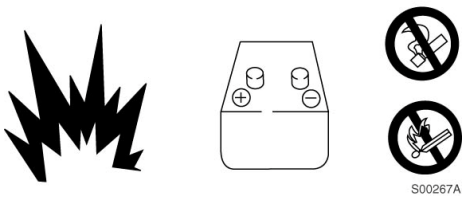

Figure 5
Take care when handling the battery

- Battery poles and cables may cause short circuits and burns when coming in contact with metal objects.

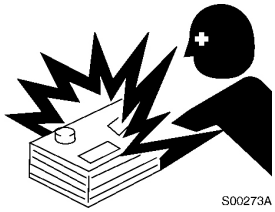

Figure 6
Battery poles and cables can cause burns

- Do not touch any poles, cables and terminals.
- Tighten battery poles to ensure proper contact.
- Ensure correct polarity when removing and installing the battery.

- Water seeping into the electrical system can cause malfunctions or total failure.
  Therefore do not use water on sensors, lug connectors and instruments in the cabin.

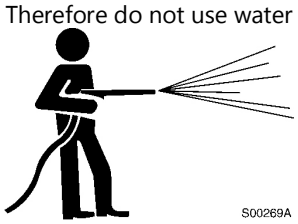

Figure 7
Do not use water or steam in the cabin.

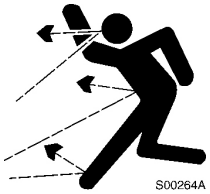

Figure 8
Take care when removing covers

Safety measures during operation

- When removing covers which are under pressure or preloaded by a spring always leave in two fastening screws opposite each other. Slowly relieve the pressure, then remove the fastening screws carefully.

- High pressure grease in the spring pack of the lower frame can explode and cause injury.

Figure 9
Do not touch rotating parts

- Be careful when opening the grease valve.
- Do not loosen the grease valve for more than one turn before the pressure has been relieved.
- Always comply with the specified tightening torques when assembling or installing parts.
- Especially when assembling safety devices or fast rotating parts you must make sure that these are correctly assembled and installed.
- Protect clothes and hair agsint contact with rotating parts.

- When aligning bore holes do not insert your fingers or even you whole hand. Take care not to squash your fingers in a bore hole or between parts and a tool.

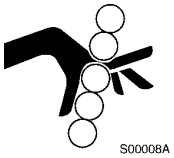

Figure 10
Mind your fingers (1)

- Do not touch any rotating parts, such as fan blades or fanbelt.

Figure 11
Mind your fingers (2)

Figure 12
Do not touch any rotating parts

- Be extremely careful when removing or assembling tracks. When removing the track bolt the track will suddenly come apart. Make sure that nobody is standing at the ends of the track. Always block the ends of the track to avoid sudden movements.

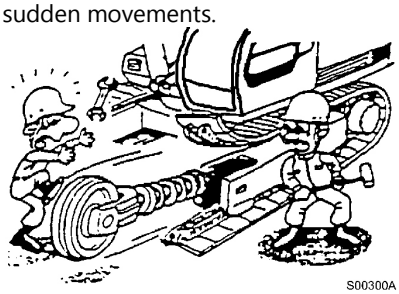

Figure 13
Be extremely careful when removing or assembling tracks

Many thanks for your purchase.
Happy every day.

VOLVO
Construction Equipment

Service Information

Document Title: **Lubricant recommendations**	Function Group: **160**	Information Type: **Service Information**	Date: **2014/4/2 0**
Profile:			

Lubricant recommendations

Lubricant

Tank	Fluid	Ambient temperature									Filling capacity
		-22 -30	-4 -20	14 -10	32 0	50 10	68 20	86 30	104 40	122 °F 50 °C	
Engine oil sump with oil filter	Engine oil					**SAE 30**					3.6 l
				SAE 10W							
		*		**SAE 10W-30**							
			SAE 15W-40								
									SAE 40		
Hydraulic oil tank	Hydraulic oil			**ISO-VG 32**							17.5 l
			*	**ISO-VG 46**							
						ISO-VG 68					
Chain gear, left	Gear oil	**SAE 80W-90 and API GL5**									0.33 l
Chain gear, right											0.33 l
Fuel tank	Diesel oil	**ASTM D975 Nr. 1**									18 l
					ASTM D975 No. 2						
Live ring	Grease	*									
		MULTI-PURPOSE #2									-
Cooling system	Longtime coolant	**WARNING** **"Longtime coolant", fluorescent yellow colour (COOLELF SUPRA) or fluorescent orange colour (COOLELF SUPRA GF). This coolant must not be mixed with any other type of coolant.**									5 l

NOTE!
*: ex works

ASTM: American Society of Testing and Material
SAE: Society of Automotive Engineers
ISO: International Standardization Organization
API: American Petroleum Institute

- Initial filling: Total filling quantity incl. Oil in components and lines.
- Replenishment: Quantity to top up to maximum level during normal inspection and maintenance.

CAUTION

With a sulphur content of less than 0.5% in the diesel fuel the engine oil must be changed in compliance with the maintenance instructions in this manual. With a sulphur content of more than 0.5% the engine oil must be changed according to the following table.

Fuel sulphur content and change intervals

Sulphur content in diesel fuel	**Frequency of engine oil change**
0.5%...1.0%	½of the normal interval
More than 1.0%	¼of the normal interval

CAUTION

If the machine is started at ambient temperatures of less than 0 °C, engine oil of class SAE 10W, SAE 10W-30 or SAE 15W-40 must strictly be used, even if the temperature will raise to 10 °C or more.

CAUTION

According to API engine oil of class CF or CG must be used. If engine oil of class CD is used instead, the change interval must be halved.

Document Title:	Function Group:	Information Type:	Date:
Cleanliness, braking and hydraulic system	**170**	**Service Information**	**2014/4/2 0**
Profile:			

Cleanliness, braking and hydraulic system

Ensure strict cleanliness during all work. Dry all pipe and hose connections before disconnecting, remove paint scales and similar. Close pipes, hoses, cylinders etc. immediately after disconnecting. Never connect an opened hydraulic hose without cleaning it beforehand.

Document Title:	Function Group:	Information Type:	Date:
Electric welding	**170**	**Service Information**	**2014/4/2 0**
Profile:			

Electric welding

When performing welding work on the machine or on equipment connected with the machine the electric power supply must be interrupted with the battery disconnecting switch or by disconnecting the ground terminal on the battery.
Connect the welding unit a close to the welding location as possible.

Document Title: **Repairs in hydraulic system**	Function Group: **170**	Information Type: **Service Information**	Date: **2014/4/2 0**
Profile:			

Repairs in hydraulic system

When replacing a pump or in case of other interventions in the hydraulic system, during which air may enter into the system, the following must be observed:

1. The pumps must be filled with oil.
2. Start the engine and run it with **low idle speed** for approx. 10 minutes, do not operate any hydraulic functions during this time.
3. Operate all hydraulic functions several times at low **idle speed** of the engine.

   CAUTION

   Do not extend or retract hydraulic cylinders to their end positions when doing so.

4. Operate all hydraulic functions with raised engine speed (approx. 20-25 rps or 1200-1500 rpm) several times to the end positions, but avoid overflowing.

Document Title:	Function Group:	Information Type:	Date:
Change engine oil, replace filter	**173**	**Service Information**	**2014/4/2 0**
Profile:			

Change engine oil, replace filter

Op nbr 22202

2903012 Filter wrench

NOTE!
First oil change after 50 hours, then every 250 hours.

Draining

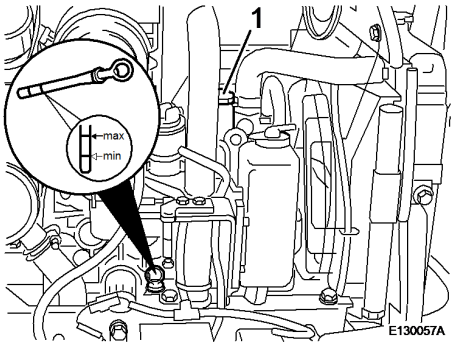

Figure 1

NOTE!
Drain off the oil while the engine is warm.

WARNING

Be careful when changing oil, hot oil can cause scalding to unprotected skin.

1. Open the engine hood and unscrew the oil filler cap (1).
2. Unscrew the drain plug and let all oil run out.

   WARNING

   Dispose of collected engine oil environmentally.
3. Clean the drain plug and turn it back in with a new seal ring.
4. Unscrew the oil filter from the engine block using the filter wrench.

   WARNING

   Dispose of the disassembled oil filter environmentally.
5. Slightly oil the seal on the new oil filter with engine oil.

6. Screw on the new filter cartridge by hand. When the seal touches the contact face turn further for another 1/2 of a turn.

7. Fill in oil, until the filling level has reached the "Max" mark on dipstick (3).
   Filling capacity approx. 3,6 l

8. Start the engine and check for leaks in the vicinity of the filter.

9. Shut the engine down. Check the oil level, fill up oil if necessary.

Document Title:	Function Group:	Information Type:	Date:
Changing the hydraulic oil	**173**	**Service Information**	**2014/4/2 0**
Profile:			

Changing the hydraulic oil

Change the hydraulic oil every 1000 hours.

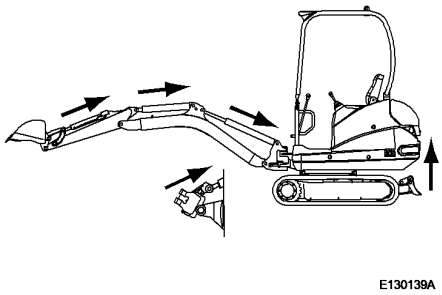

Figure 1

Op nbr

1. Operate all piston rods ([Invalid linktarget]) until they are fully retracted. Lower the working attachment to the ground and shut the engine down.

   WARNING

   Hydraulic oil may be very hot, do not touch. Danger of scalding!

   CAUTION

   Hydraulic oil must be drained off warm.

   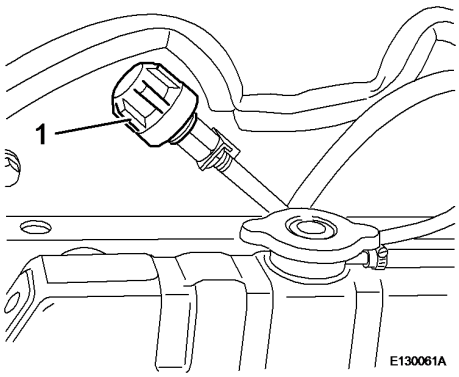

   Figure 2

2. Remove and clean the breather (1).

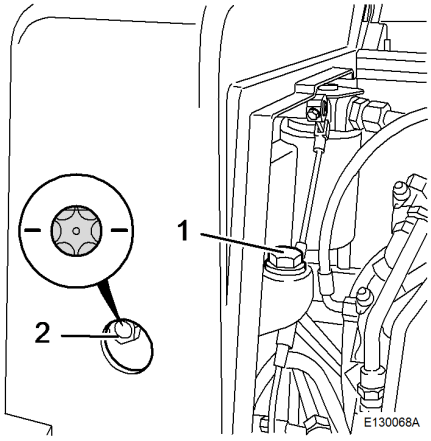

Figure 3

3. Unscrew filler plug (1) and take it off with seal ring.

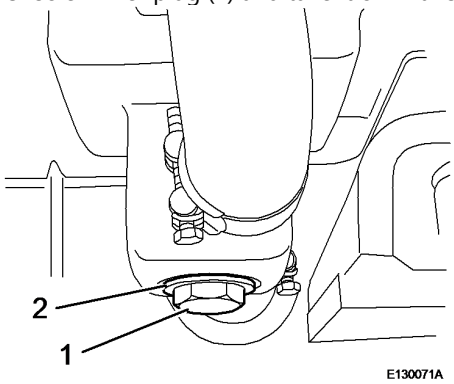

Figure 4

4. Unscrew drain plug (1), take it off with seal ring (2) and let the hydraulic oil run out.

WARNING

Catch hydraulic oil and dispose of environmentally.

NOTE!
Check the tank for dirt deposits, clean if necessary.

5. Assemble drain plug (1) with a new seal ring (2) and tighten with 39 ± 5 Nm.

6. Fill the hydraulic oil tank with oil, see chapter 0 - Fuels, lubricants and filling capacities (litres), Seite 22 - until the maximum filling level ([Invalid linktarget] /2) is reached.

7. Assemble the breather ([Invalid linktarget] /1).

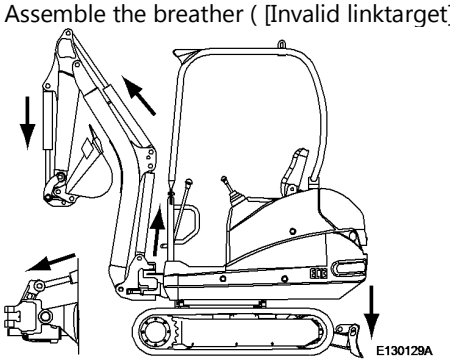

Figure 5

8. Start the engine, move the working attachment control lever slowly to both directions and perform all working movements.

9. Check the hydraulic oil level.

10. Extend all cylinders to their end positions ([Invalid linktarget]), while the machine is standing on level ground. The oil level must now comply with the level shown in [Invalid linktarget] /2.

11. Top up oil if necessary.

Document Title:	Function Group:	Information Type:	Date:
Checking the hydraulic oil level	**173**	**Service Information**	**2014/4/2 0**
Profile:			

Checking the hydraulic oil level

Check the hydraulic oil every 10 hours.

Park the machine on a horizontal base. Operate all cylinders to both directions while the engine is running.

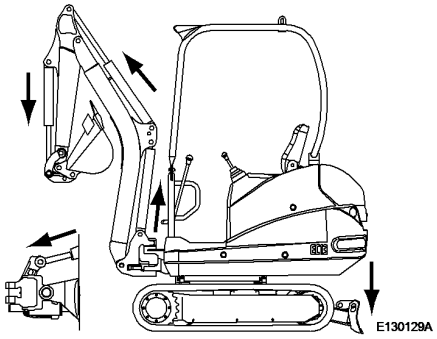

Figure 1

Actuate all cylinder to their end position.

Check the hydraulic oil level in the inspection glass (1), it must reach the level shown in the illustration.
Top up oil if necessary.

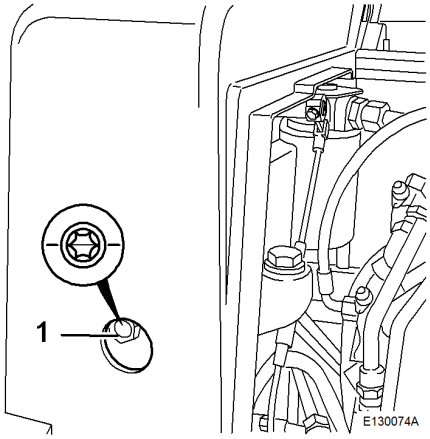

Figure 2
Checking the hydraulic oil level

1. Inspection glass

Document Title:	Function Group:	Information Type:	Date:
Cylinder speed	**173**	**Service Information**	**2014/4/2 0**
Profile:			

Cylinder speed

Preparation

Boom cylinder

- Retract dipper cylinder completely.
- Extend dipper cylinder completely.

Measurement

- Move the control lever against the stop.

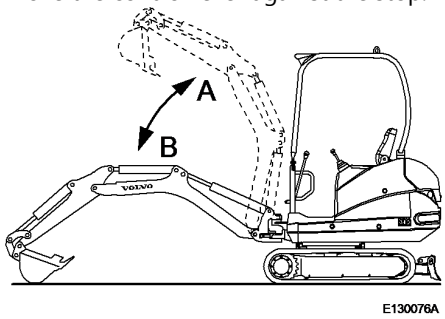

Figure 1
Measuring conditions, boom cylinder

A. Lifting
B. Lowering

- Measure the time the cylinder needs for the full stroke with a stopwatch.
- Perform this measurement three times and calculate the average.

Dipper cylinder

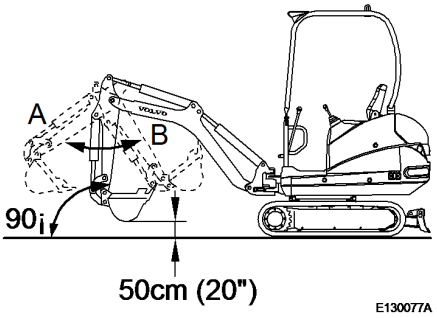

Figure 2
Measuring conditions, dipper cylinder

A. Tipping forward
B. Tipping back

- Extend dipper cylinder completely.

Measurement

- Move the control lever against the stop.
- Measure the time the cylinder needs for the full stroke with a stopwatch.
- Perform this measurement three times and calculate the average.

Bucket cylinder

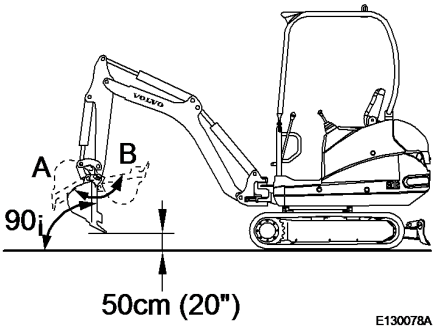

Figure 3
Measuring conditions, digger cylinder

A. Tipping forward
B. Tipping back

Measurement

- Move the control lever against the stop.
- Measure the time the cylinder needs for the full stroke with a stopwatch.
- Perform this measurement three times and calculate the average.

Dozer blade cylinder

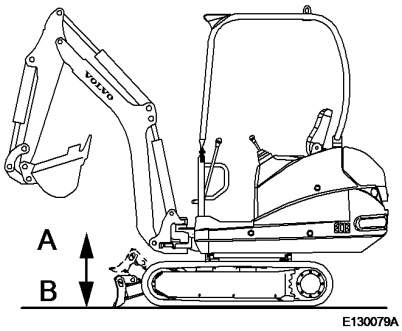

Figure 4
Measuring conditions, dozer blade cylinder

A. Lifting
B. Lowering

Measurement

- Move the control lever against the stop.
- Measure the time the cylinder needs for the full stroke with a stopwatch.
- Perform this measurement three times and calculate the average.

Boom slewing cylinder

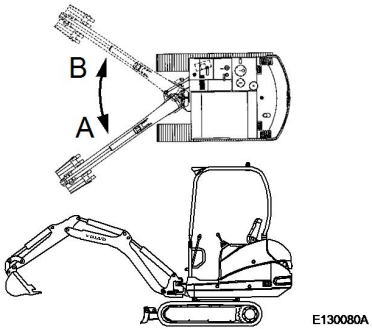

Figure 5
Measuring condition, boom slewing cylinder

A. Rotation to left
B. Rotation to right

The dipper arm cylinder is fully retracted.
Extend the bucket cylinder completely.
Measure the time required for slewing from extreme opposite position to left or right hand end position.

Measurement

- Move the control lever against the stop.
- Measure the time the cylinder needs for the full stroke with a stopwatch.
- Perform this measurement three times and calculate the average.

Cylinder speed, unit: sec.

	Movement	**Standard**	**Permissible value**
Boom	Lifting	2.0 ± 0.3	2.5
	Lowering	2.6 ± 0.3	3.1
Dipper	Tipping back	3.1 ± 0.3	3.6
	Tipping forward	2.4 ± 0.3	2.9
Bucket	Tipping back	3.8 ± 0.3	4.3
	Tipping forward	2.4 ± 0.3	2.9
Dozer blade	Lifting	1.0 ± 0.3	1.5
	Lowering	1.5 ± 0.3	2.0
Slewing the boom	to left	5.7 ± 0.5	6.7
	to right	4.3 ± 0.5	5.3

Document Title:	Function Group:	Information Type:	Date:
Engine air filter unit	**173**	**Service Information**	**2014/4/2 0**
Profile:			

Engine air filter unit

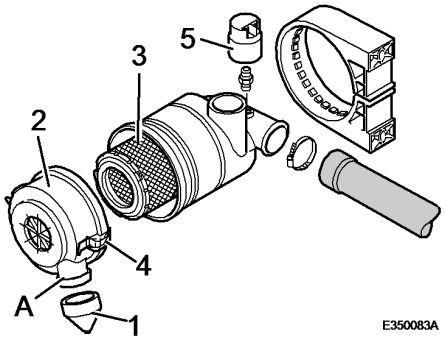

Figure 1

1. Valve
2. Cover
3. Filter element
4. Hook-type lock
5. Blockage indicator

Remove dust

- Make sure the opening **(A)** is not clogged.
- Remove the accumulated dust by pressing the valve **(1)**.

Cleaning the filter element1

- Take off cover **(2)**.
- Take out filter element **(3)**; move the filter element carefully up, down and to the sides or turn it to free a seal.
- Clean all internal parts of the filter body.
- Clean the filter element with compressed air (highest permissible pressure 5 bar). Hold the compressed air hose at a distance of approx. 3 cm to the filter wall, so that the jet blows from top to bottom. For cleaning the filter element is blown out with compressed air from inside to outside.

WARNING

Do not clean the filter element by banging it against a hard surface.

- If the filter element is clogged by carbon deposits or oil use a new element.

WARNING

Before installing the filter element check the condition of the seal. Insert a light source into the filter element and examine the functionality of the filter element. If a puncture (visible by light) is found, replace the filter element.

Replace the filter element

- Proceed as described in section "Cleaning the filter element" to remove the filter element.
- Check the new safety filter element with a light source.

- Install the new filter element after applying a thin film of engine oil (or silicone) to the sealing face.
- When assembling the cover close the hook-type locks **(4)** without excessive pressure.

Document Title:	Function Group:	Information Type:	Date:
Hydraulic system, replacement of hydraulic filter element1	**173**	**Service Information**	**2014/4/2 0**
Profile:			

Hydraulic system, replacement of hydraulic filter element1

Replace the hydraulic filter element every 1000 hours.

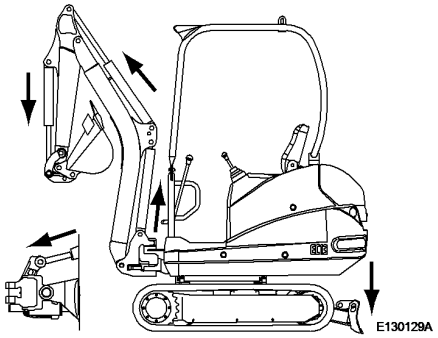

Figure 1

Op nbr

1. Actuate all cylinder to their end position ([Invalid linktarget]). Shut down the engine and move the control levers for boom, dipper, bucket and accessories to all directions and relieve remaining pressure.

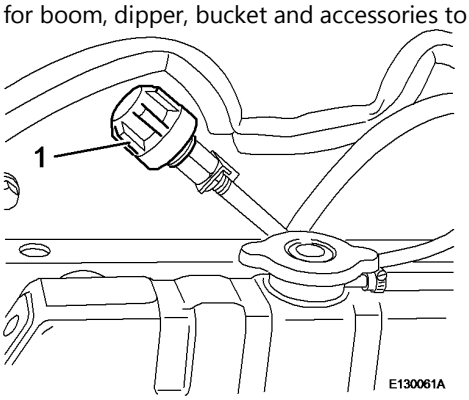

Figure 2

2. Remove and clean the breather (1).

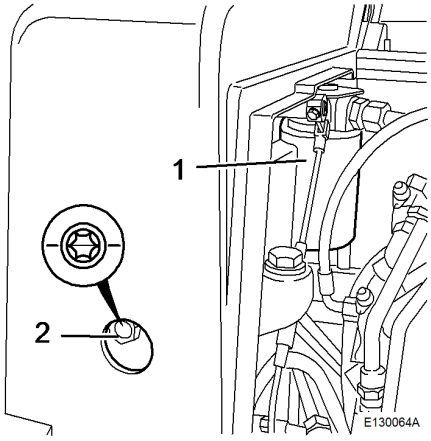

Figure 3

3. Unscrew the hydraulic oil filter (1).

WARNING

Dispose of the hydraulic oil filter (1) environmentally.

4. Apply some oil to the seal ring on the hydraulic oil filter and install the filter.

5. Assemble the breather ([Invalid linktarget] /1).

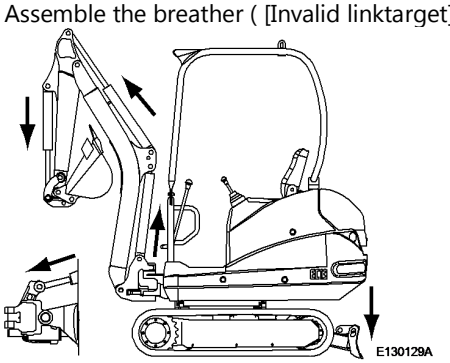

Figure 4

6. Move the control levers slowly to both directions to perform the working movements.

7. Check the oil filling level ([Invalid linktarget] /2).

8. Extend all cylinders to their end positions ([Invalid linktarget]), while the machine is standing on level ground. The oil level must now comply with the level shown in ([Invalid linktarget]).

9. Top up oil if necessary.

Document Title:	Function Group:	Information Type:	Date:
Inspection	**173**	**Service Information**	**2014/4/2 0**
Profile:			

Inspection

Measuring conditions

This chapter explains how to check the performance of hydraulic excavators from Volvo.
The following tolerances apply for new machines.
Depending on the applicational conditions certain deviations are permissible on used machines.
If not specified differently, the measurements must be
performed under the following conditions:

- Engine speed: full speed, operating mode “P”.
- Hydraulic oil temperature: 50 ± 5 °C.
- Parked: on firm, level ground.

Document Title: **Maintenance instructions**	Function Group: **173**	Information Type: **Service Information**	Date: **2014/4/2 0**
Profile:			

Maintenance instructions

In order to maintain the optimal operating condition of the machine and to ensure safety during work all maintenance work must be performed at regular intervals and in compliance with the instructions.
Improper lubrication, maintenance and operation of the machine can be dangerous and may even cause fatal injury.

CAUTION

For more detailed information on regular maintenance refer to the operating instruction manual.

Maintenance every 10 hours (before start-up)

- General inspection
  - Oil, water and fuel leaks
  - External condition of machine components and hoses.
  - Fastening elements: Screw fittings and hydraulic connections
  - Correct function of control elements, working headlights and control lights
  - Operation of diesel engine
- Coolant circuit

  Check the coolant level in the compensation tank, the level must be between the Min. and Max. marks. Fill up coolant if necessary.
- Engine oil level

  Check the oil level with the dipstick and top up oil if necessary.
- Fuel level

  Fill the fuel tank every day after work.
- Air filter element

  Check and clean the element after operation. If necessary replace the element.
- Hydraulic circuit

  Check oil level and fill up if necessary.[1] ⓘ
- Bucket teeth

  Check bucket teeth for excessive wear and cracks. Replace if necessary.
- Track pads

  Check for loose screws, if necessary tighten with the specified torque.
- Lubrication

  If no automatic lubrication system is installed, grease the following parts and bolts: Dipper/bucket bolts,

dipper/connecting rod bolts, joint/bucket cylinder – rod head bolts and bucket/connecting bolts.

- Track tension

  Measure the sagging of the track to check the tension. Adjust the tension if required.

Maintenance after 50 operating hours

- Check the belt tension especially in the warm season. If necessary adjust or replace the belt.
- Change engine oil and filter.

  Drain off all oil and fill in new engine oil according to specification. Use only genuine filters.

⚠ CAUTION

If any parts other than genuine ones are used and a serious damage occurs, the machine warranty may become null and void.

- Check the fan belt tension.

  If necessary adjust or replace the fan belt.

- Check the valve rocker for correct adjustment.

  Adjust if necessary.

- Check the tightening torque of the engine mounting screws.
- Replace the hydraulic oil filter element.

  Use genuine parts. When installing take care not to damage the O-ring.

- Check hydraulic pressures.

Maintenance every 50 operating hours

- Fuel system

  Drain off condensation water and clean fuel pre-cleaner.

Maintenance every 250 operating hours

- Oil level in Travel gear

  Check the oil level and top up if necessary. If the oil level is very low check the sliding face seal for leaks. Repair if necessary.

- Change engine oil and filter.

  Drain off all oil and fill in new engine oil according to specification. Use only genuine filters.

- Check the fan belt tension.
- Replace the fan insert.

  Use only genuine spare parts.

- Check and clean radiator and oil cooler.
  - Check the cooling fins for foreign particles.

- Clean cooling fins with compressed air.

Maintenance every 500 operating hours

- Check and adjust the engine valve clearance.

  Check the clearance of inlet and exhaust valves on the engine. Adjust if necessary.

- Replace the fuel pre-filter.

  Replace the filter element.

- Replace the air filter element.

- Change the hydraulic oil return flow filter. [2] ⓘ

  Use genuine parts. Vent the hydraulic oil tank before opening the filter cover. When installing take care not to damage the O-ring.

- Check hydraulic pressures.

Maintenance every 1000 operating hours

- Change oil in travel gear.

  Drain off all oil and fill in new oil according to specification.

- Check and adjust the engine valve clearance.

  Check the clearance of inlet and exhaust valves on the engine. Adjust if necessary.

- Change the hydraulic oil and clean the suction filter. [3] ⓘ

- Check the function parts bof the engine.

  Check starter, generator and vibration damper V-belt pulley on engine. Repair or replace if necessary.

- Check the injection nozzles for correct adjustment.

  Measure the injection nozzles on the engine. Replace if necessary.

- Check the glow plugs.

  Replace glow plugs if necessary.

- Check the tightening torque of the engine mounting screws.

Maintenance every 3000 operating hours

- Clean cooling system and replace coolant (every 3 years).

  Clean the cooling fins on radiator and oil cooler and change the coolant. Use a coolant for heavy-duty applications throughout the year.

[1]If the machine is operated with biodegradable oil, the same oil must be used to fill up. Biodegradable oils cannot be mixed among each other.

[2]Biodegradable oil e.g.: "PANOLIN"-oil: reduce the interval to 350 hours.

[3]Biodegradable oil e.g.: "PANOLIN"-oil: reduce the interval to 750 hours.

Document Title:	Function Group:	Information Type:	Date:
Recharging of batteries	**173**	**Service Information**	**2014/4/2 0**
Profile:			

Recharging of batteries

Danger of explosion!

During recharging oxyhydrogen gas is generated inside the battery. A short circuit, open fire or sparks in the vicinity of the battery can therefore cause a heavy explosion. Always switch off the charging current before disconnecting the charging clamps. Ensure good ventilation, especially when recharging the battery in a closed room.

Caustic sulphuric acid

The battery electrolyte contains caustic sulphuric acid. Battery acid that has come in contact with your skin should be washed off immediately. Wash with soap and lots of water. If battery acid has squirted into your eyes or any other sensitive part of your body, rinse off with lots of water and consult a physician immediately.

VOLVO
Construction Equipment

Service Information

Document Title:	Function Group:	Information Type:	Date:
Travel gear, oil change	**173**	**Service Information**	**2014/4/2 0**
Profile:			

Travel gear, oil change

Change interval: 1000 hours

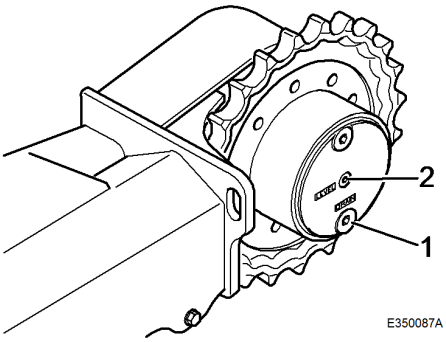

Figure 1

Op nbr

WARNING

Be careful when changing oil, hot oil can cause scalding to unprotected skin.

1. Unscrew plugs (1 and 2) and let all oil run out.

   WARNING

   Dispose of collected gear oil environmentally.

2. Turn plug (1) back in.

3. Fill in oil through filler opening (2) until it reaches the bottom edge of the filler bore.

4. Turn plug (2) back in.
   Filling capacity per travel gear: 0.33 l

VOLVO
Construction Equipment

Service Information

Document Title:	Function Group:	Information Type:	Date:
Creeping of hydraulic cylinders	**173**	**Service Information**	**2014/4/2 0**
Profile:			

Creeping of hydraulic cylinders

Preparation

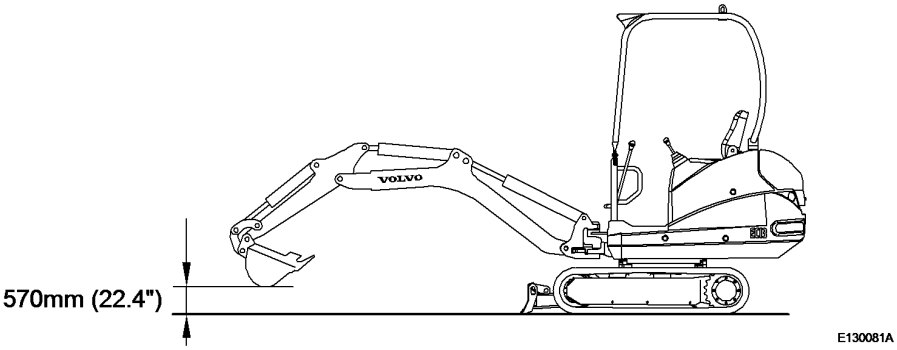

Figure 1
Measuring conditions, creeping

- Bucket fully loaded
- Retract dipper arm cylinder completely
- Extend dipper cylinder completely

Measurement

Measure the distance of the cylinder fastening bolts. Repeat the measurement after 5 minutes and check how far the cylinder:

- has retracted at the boom
- has extended at the dipper
- has retracted at the bucket

.

Creeping value, unit: mm/5 min.

		Standard	**Permissible value**	**Limit**
Boom cylinder	A	Less than 4.0	6.0	8.0
Dipper cylinder	B	Less than 15.0	20.0	30.0
Bucket cylinder	C	Less than 5.0	8.0	10.0

VOLVO
Construction Equipment

Service Information

Document Title:	Function Group:	Information Type:	Date:
Deviation when travelling straight ahead	**173**	**Service Information**	**2014/4/2 0**
Profile:			

Deviation when travelling straight ahead

Preparation

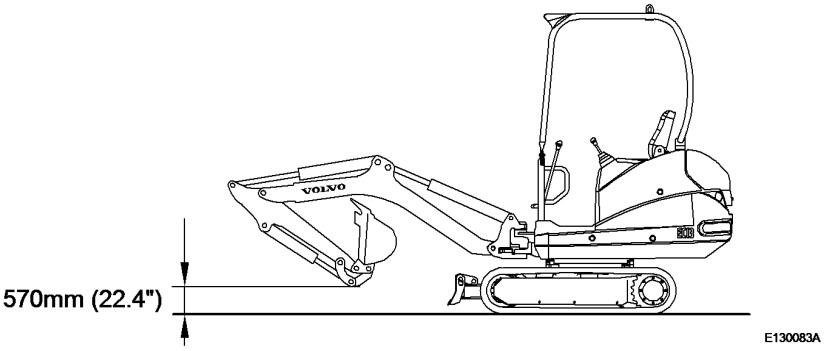

Figure 1
Measuring conditions, deviation when travelling straight ahead

- Fully extend the dipper and bucket cylinders.
- Bring the working attachment to travel position.

Measurement

- Move both travel levers simultaneously to the end stop.
- Measure the distance between the imaginary connecting line of both machine positions and line B.
- Repeat the measurement three times and calculate the mean value.
- Swivel the superstructure by 180 degree and repeat the measurement when driving in reverse.

Permissible limit value, deviation when travelling straight ahead, unit: mm (in)

	Standard	**Permissible value**	**Limit**
Deviation distance B	Less than 200	300	400

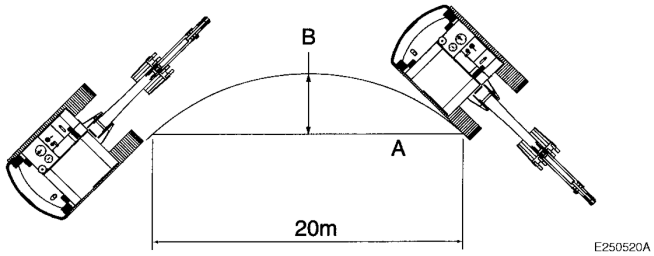

Figure 2
Deviation when travelling straight ahead

Document Title: **Measuring the play of the slewing bearing**	Function Group: **173**	Information Type: **Service Information**	Date: **2014/4/2 0**
Profile:			

Measuring the play of the slewing bearing

Play of slewing bearing

			Specification
Bearing play in axial direction	Disassembled	Standard	0.15 ~ 0.35 mm
		Permissible play	0.6 mm
	Assembled	Standard	2.0 ~ 4.0 mm
		Permissible play	5.0 mm
Tightening torque	Outer screw		26.7 ± 2.7 Nm
	Inner screw		

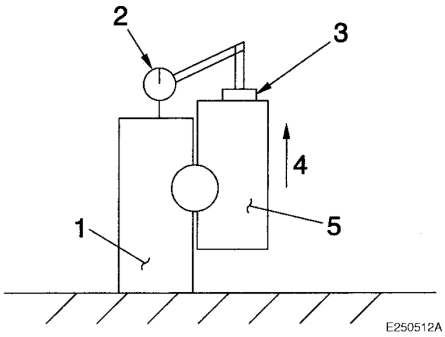

Figure 1
Measure, bearing play (disassembled)

1. Inner race
2. Dial gauge
3. Magnetic stand
4. Movement
5. Outer race

Measurement

CAUTION

Before proceeding with the measurement make sure that all fastening screws are properly tightened.

Disassembled

- Lay the live ring on a level surface and attach three magnetic stands to the outer race with distances of 120 degrees to each other.
- Attach three dial gauges to the inner race.
- When pulling the outer race vertically up (4) the axial play complies with the movement between the bearing races.
- Read the values indicated by the dial gauges.

Assembled

Clean the outer race of the live ring and the bottom side of the lower frame.
The live ring is not evenly worn over the entire circumference.
In order to obtain the correct bearing play two measurements are required, whereby the superstructure needs to be swivelled by 90 degrees in between.

1. Measurement

- Align the superstructure to the middle of the lower frame.
- Lower the working attachment to the ground, until the tracks are partly lifted off the ground ([Invalid linktarget]).
- Attach the magnetic stand ([Invalid linktarget]).
- Attach the dial gauge to the bottom side of the superstructure and bring the measuring tip in contact with the underside of the lower frame and set to zero, or vice versa ([Invalid linktarget]).
- Lower the excavator slowly to the ground and maintain the bucket with extended dipper at the height of the cabin floor ([Invalid linktarget]). Read the value indicated by the dial gauge.
- Lower the bucket to the ground again, lift the machine up and check whether the dial gauge has returned to zero.

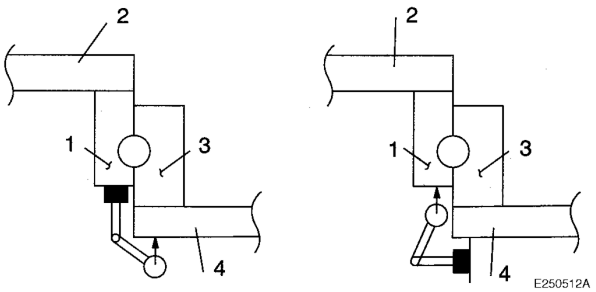

Figure 2
Measurement, bearing play (assembled)

1. Outer race
2. Superstructure
3. Inner race
4. Lower frame

2. Measurement

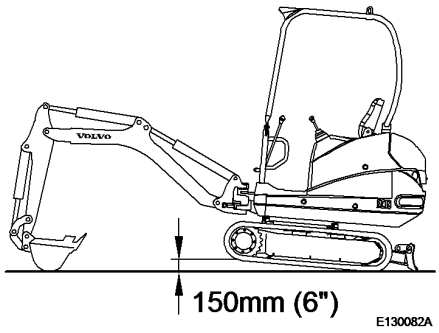

Figure 3
Measurement, bearing play (position 1)

- Turn the superstructure by 90 degrees in relation to the first measurement.
- Measure the play once again using the same method as described for measurement 1.

Permissible play

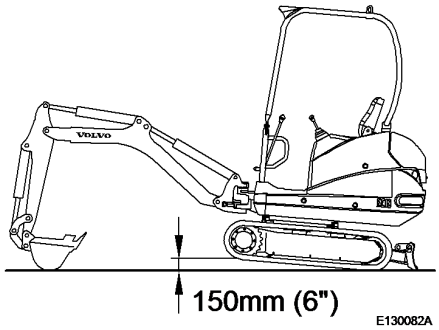

Figure 4
Measurement, bearing play (position 2)

Measure the play twice in each position and enter the values into the following table.

Recording the clearance

	Measuring value with superstructure in position 1	**Measuring value with superstructure in position 2**
A First measurement		
B Second measurement		
Total	A + B	A + B
Mean value	Total/2	Total/2

If there is a big difference between measurements A and B this is most likely caused by a measuring fault. The measurement should therefore repeated several times.

CAUTION

The most frequent cause for a failure of the live ring is excessive axial bearing play. For this purpose lubricate the bearing at regular intervals, values see [Invalid linktarget] .

VOLVO
Construction Equipment

Service Information

Document Title:	Function Group:	Information Type:	Date:
Slewing overtravel	**173**	**Service Information**	**2014/4/2 0**
Profile:			

Slewing overtravel

Preparation

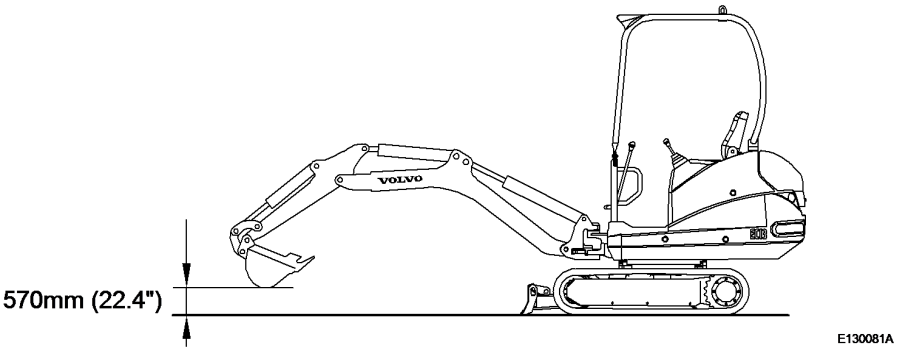

Figure 1
Measuring conditions, slewing speed

- Bucket fully loaded
- Retract dipper arm cylinder completely
- Extend dipper cylinder completely

- Mark the slewing bearing and the lower frame directly underneath.

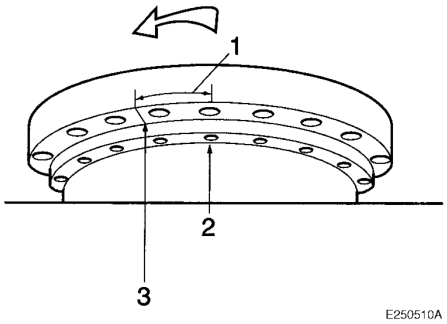

Figure 2
Measure the overtravel

1. Overtravel
2. Mark on lower frame
3. Mark on slewing bearing

- Swivel the superstructure by 180 degrees.

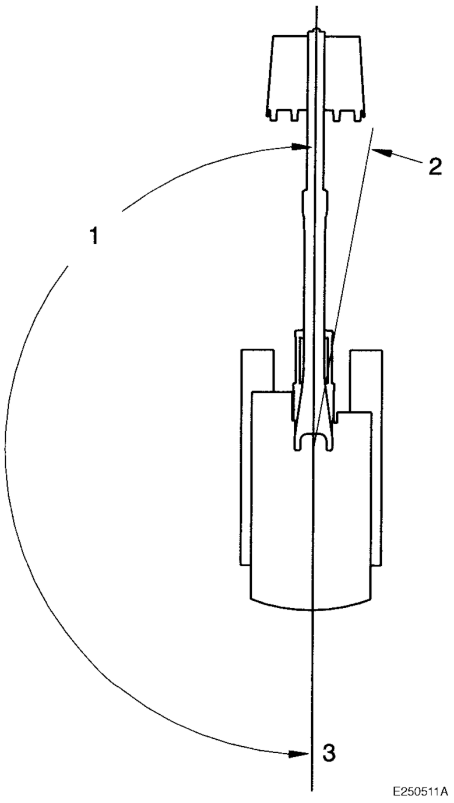

Figure 3
Overtravel

1. Overtravel
2. Slewing by 180 degrees
3. Start of slewing movement

Measurement

- Move the slewing gear control lever to the end stop and swivel the superstructure by 180 degrees.
- If the marks are right above each other return the lever to neutral.
- Measure the distance between the mark on the live ring bearing and the mark on the lower frame.

Wear limits, unit: mm

	Standard	**Permissible value**	**Limit**
Overtravel 1	Less than 430	500	600

Document Title:	Function Group:	Information Type:	Date:
Slewing speed	**173**	**Service Information**	**2014/4/2 0**
Profile:			

Slewing speed

Preparation

- Retract dipper cylinder completely.
- Extend dipper cylinder completely.

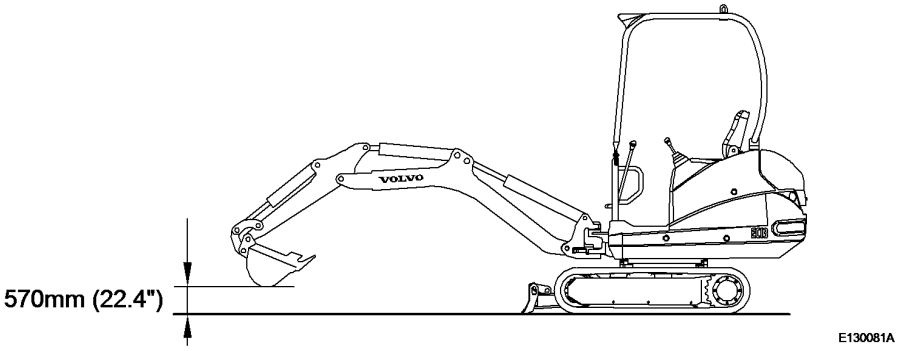

Figure 1
Measuring conditions, slewing speed

Measurement

- Move the slewing gear control lever to the end stop.
- Measure the time the superstructure needs for three full turns at constant speed. (Exclude the first full turn.)
- Measure alternately to by slewing to right and left.

Slewing speed, unit: sec / three revolutions

Standard	Permissible value	Limit
18.4 ± 1.0	21	23

VOLVO
Construction Equipment

Service Information

Document Title:	Function Group:	Information Type:	Date:
Track running speed	**173**	**Service Information**	**2014/4/2 0**
Profile:			

Track running speed

Preparation

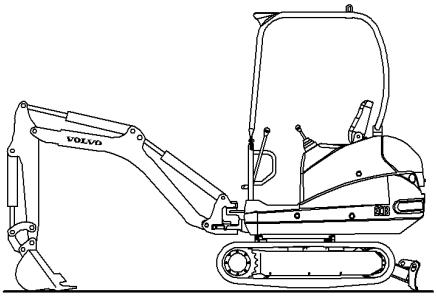

Figure 1
Measuring conditions for track running speed

- Mark one of the bottom plates on the side at which the test is to be performed.
- Raise the track to be tested off the ground.

Measurement

- Accelerate the engine to full speed.
- Measure the time the track needs to perform three full revolutions. (Exclude the first revolution.)
- Perform this test on both tracks, in both forward and reverse.

Permissible limit value, track travel speed, unit: sec./3 revolutions

		Running time		
		Set value	**Permissible value**	**Limit**
1. Gear	Left	26 ± 2.0	30	32
	Right			
2. Gear	Left	15 ± 2.0	19	21
	Right			

Document Title:	Function Group:	Information Type:	Date:
Travel speed	**173**	**Service Information**	**2014/4/2 0**
Profile:			

Travel speed

Preparation

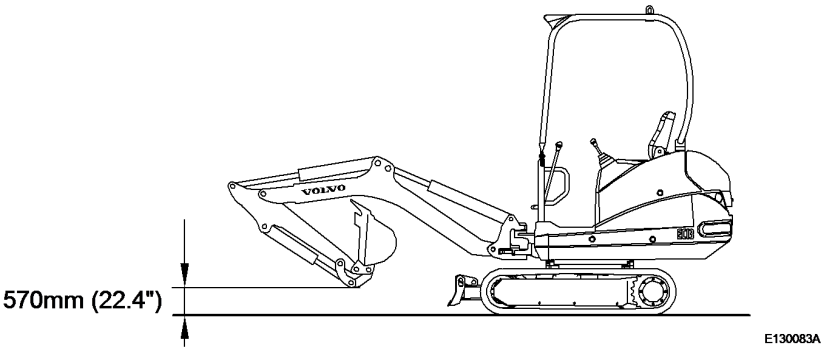

Figure 1
Measuring conditions for travel speed

Measurement

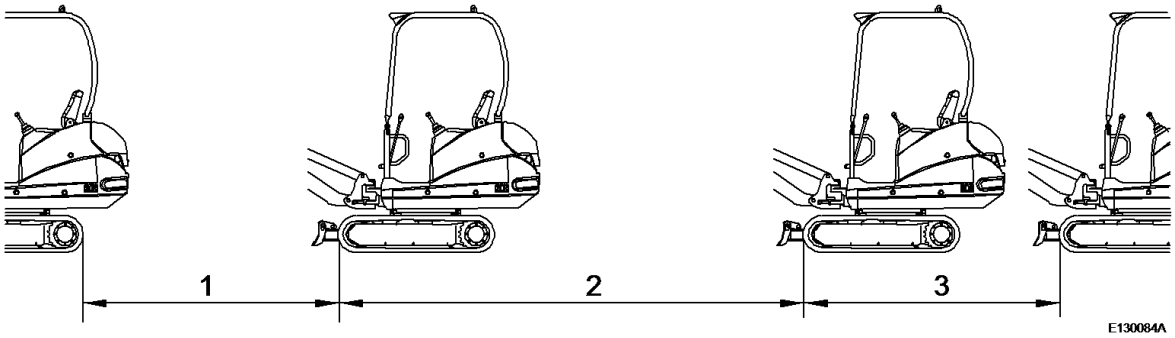

Figure 2
Measurement, travel speed

1. Approximate distance 3 ~ 5 m = travel start before measurement
2. Test distance 20 m
3. Approximate distance 3 ~ 5 m = overtravel after measurement

Permissible limit value: sec / 20 m

		Travel time		
		Standard	**Permissible value**	**Limit**
1. Gear	Rubber	27.7 ± 2.0	32	34
2. Gear	Rubber	16.3 ± 2.0	20	22

Document Title:	Function Group:	Information Type:	Date:
Jump starting	**176**	**Service Information**	**2014/4/2 0**
Profile:			

Jump starting

Starting the engine with jump wires

Before connecting the jump wires check the following:

- Jump wires and pole clamps must be appropriately dimensioned for the size of the battery.
- Check cables and clamps for damage, corrosion etc.
- Make sure that cables and clamps are tightly connected.
- Leave the starter switch in "OFF"-position (both machines).
- The battery of the running engine must have the same capacity as the battery for the engine requiring jump starting.
- When starting from another machine make sure that the machines will not touch each other.

Connect the jump wires as follows:

- Connect clamp (1) of jump wire (A) with the positive pole (+) of the machine to be jump started.
- Connect clamp (2) with the positive pole (+) of the battery on the machine with the running engine.
- Connect clamp (3) of the jump wire (B) with the negative pole (-) of the battery on the machine with the running engine.
- Connect clamp (4) with the superstucture of the machine to be jump started.

CAUTION

Make sure that the clamps are tightly connected with the battery poles. Start the engine with the fully charged battery, then start the engine that needs to be jump started.

When connecting the cables make sure that the positive (+) and the negative (–) poles do not touch.

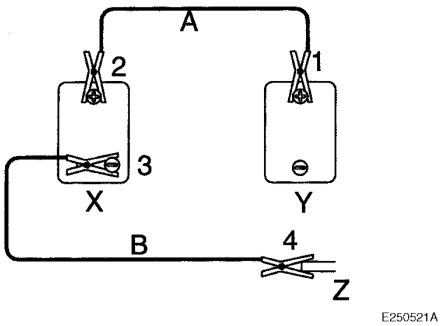

Figure 1
Connection, jump wires

CAUTION

Make sure that the jump wires are correctly connected. Connect the jump wire to the engine block, as far away from the battery as possible. Once the engine has started the jump wires must be removed in reverse order.

Start the engine

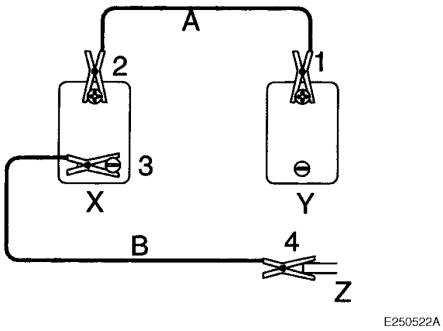

Figure 2
Disconnection, jump wires

- Turn the ignition switch to position "START" and start the engine.
- Start the engine for max. 30 seconds. Wait 2 minutes between two starting attempts.
- Once the engine has started the jump wires must be removed in reverse order.

Disconnect the cales as follows:

- Disconnect clamp (4) of jump wire (B) from the superstructure.
- Disconnect clamp (3) from the negative (–) pole of the battery for the running engine.
- Disconnect clamp (2) of jump wire (A) from the positive pole (+) of the running engine.
- Disconnect clamp (1) from the positive pole (+) of the battery for the engine that had to be jump started.

Many thanks for your purchase.
Happy every day.

Document Title:	Function Group:	Information Type:	Date:
Description	**200**	**Service Information**	**2014/4/2 0**
Profile:			

Description

The EC13 is powered by a 3-cylinder four-stroke diesel inline engine with water cooling.

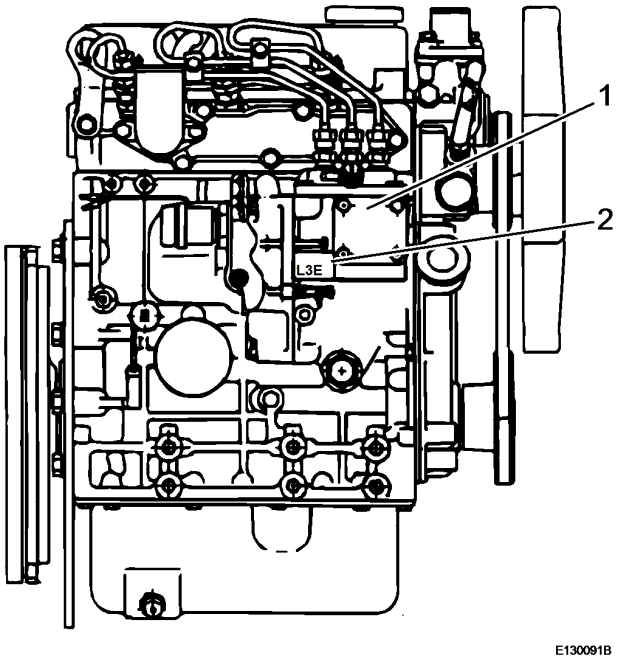

Figure 1
Engine, side view

1. Serial number
2. Engine type

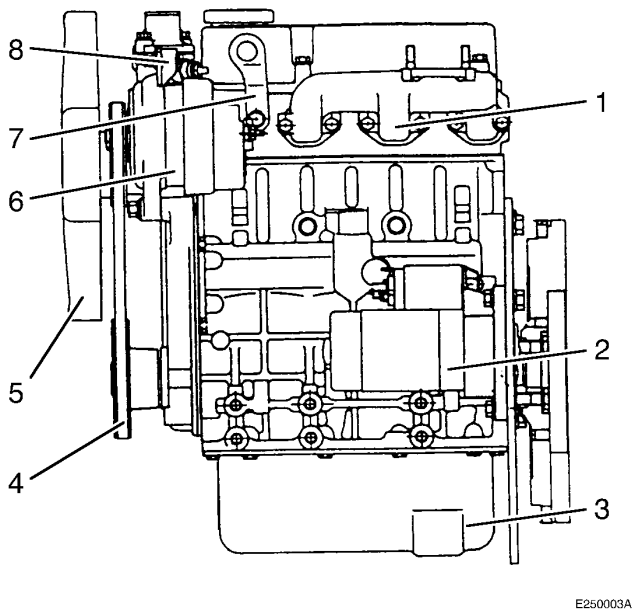

Figure 2
Left hand side view

1 Exhaust manifold	4 V-belt	7 Towing hook
2 Starter	5 Fan	8 Thermostat
3 Oil sump	6 Generator	

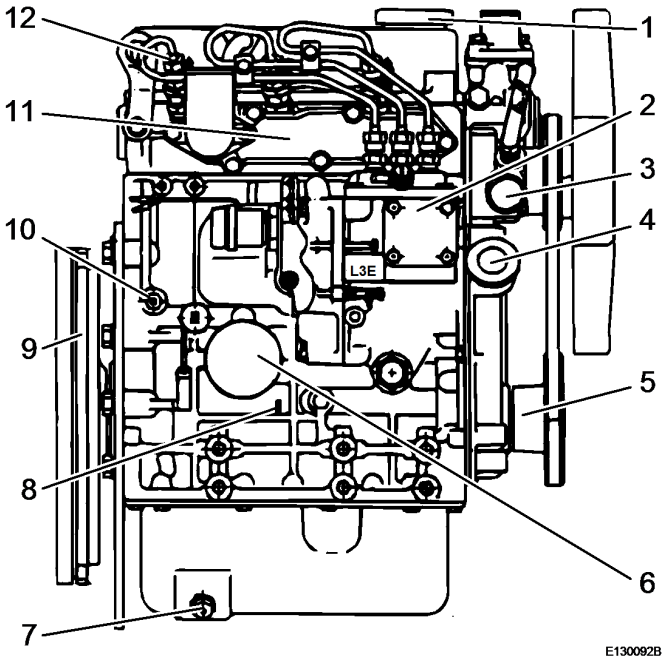

Figure 3
Right hand side view

1 Oil filler neck	4 Oil filler neck	7 Oil drain plug	10 Coolant drain plug
2 Injection pump	5 Crankshaft pulley	8 Oil dipstick	11 Intake manifold
3 Water pump	6 Oil filter	9 Flywheel	12 Injection nozzle

Document Title: **Installing the engine**	Function Group: **200**	Information Type: **Service Information**	Date: **2014/4/2 0**
Profile:			

Installing the engine

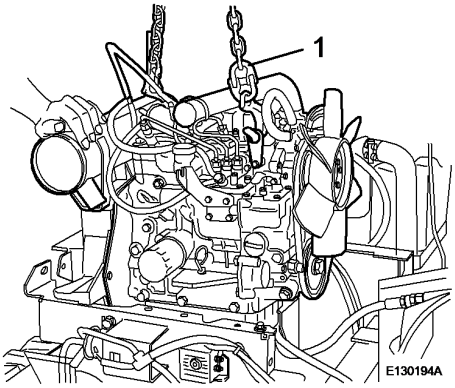

Figure 1

Op nbr 2101

Lifting sling 1 m
Shackle 3/8""

1. Attach lifting tackle (1) to the engine. Weight approx. 125 kg.

2. Lift the engine into the machine.
   NOTE!
   Take care not to damage the hydraulic hoses.

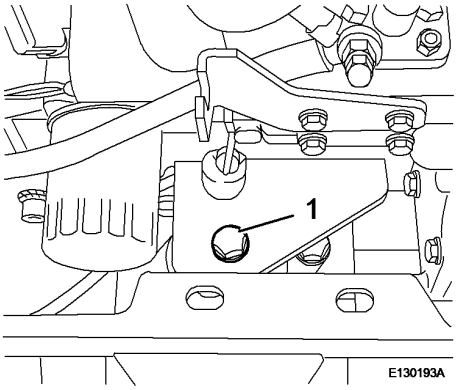

Figure 2

3. Cover the threads of screws (1) with screw retention agent, turn them into the rear and front engine mounts and tighten with 105 Nm.

4. Remove the lifting tackle to the engine.

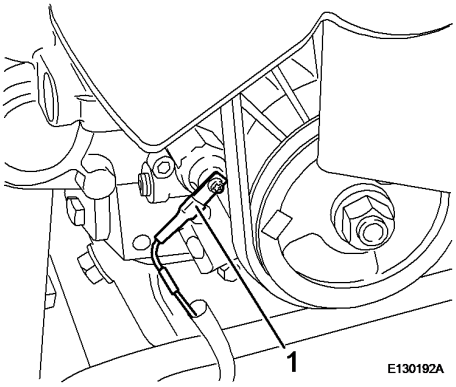

Figure 3

5. Connect electric cable (1) to the oil pressure switch.

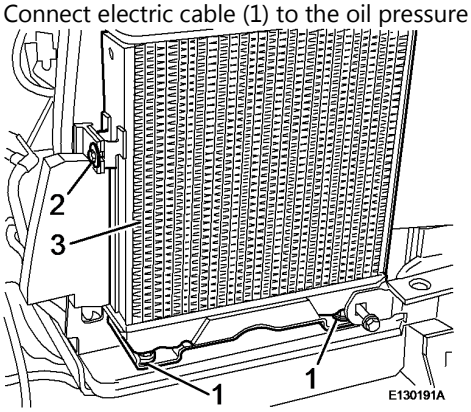

Figure 4

6. Assemble oil cooler and air baffle.

7. Assemble radiator (3) and fasten it with screws (1 and 2).

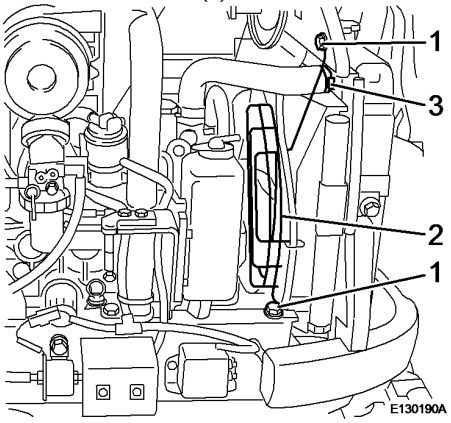

Figure 5

8. Assemble top and bottom coolant hoses with new hose clamps (3).

9. Fasten fan grid (2) with screws (1).

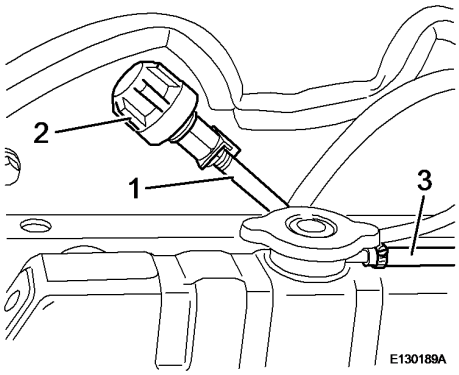

Figure 6

10. Assemble compensation tank with hose.

11. Fasten suction hose (3) to the radiator with a new hose clamp (1).

12. Connect hose (1) to the hydraulic tank breather valve.

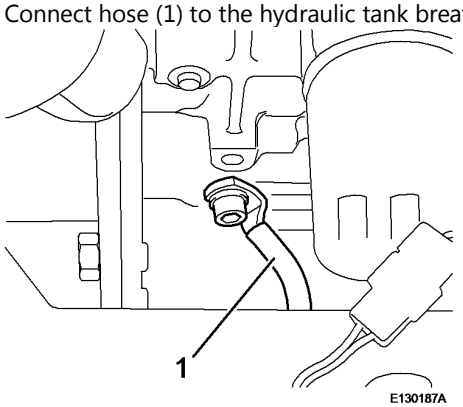

Figure 7

13. Fasten the front ground strap (1) to the engine block.

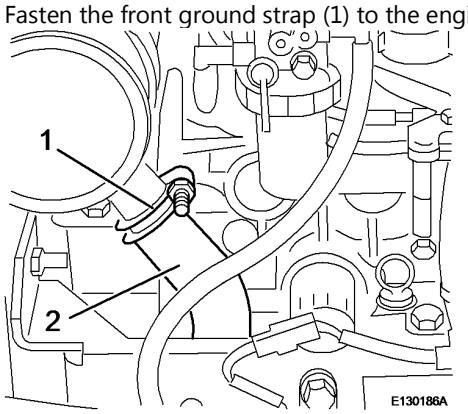

Figure 8

14. Assemble exhaust pipe (2) with a new clamp (1).

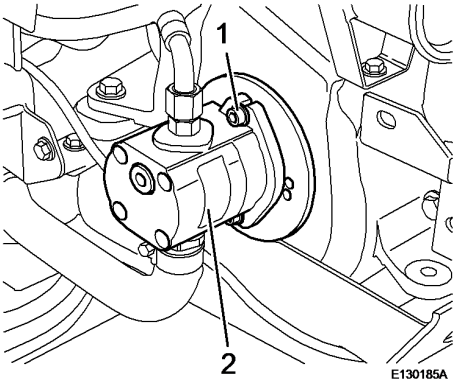

Figure 9

15. Install hydraulic pump (2), cover screws (1) with screw retention agent, turn them in and tighten with 105 Nm.

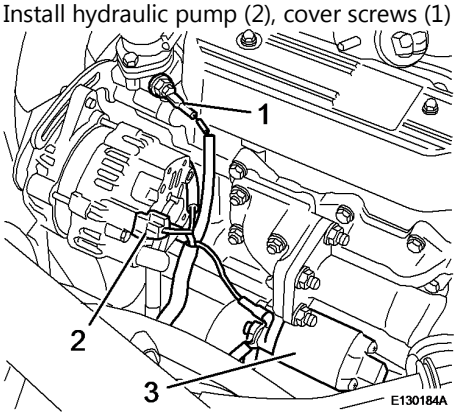

Figure 10

16. Install the engine wiring loom and connect the following components:

    - Thermal switch (1)
    - Generator (2)
    - Starter (3)
    - Pre-heating system ([Invalid linktarget] /1)

    Fasten the cables with cable straps.

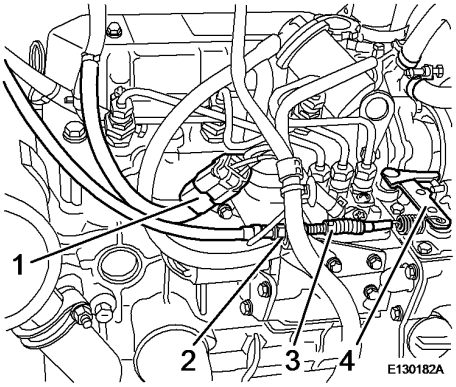

Figure 11

17. Attach throttle cable (3) to injection pump (4).

18. Adjust throttle cable (3) and fasten with counter nut (2).
    NOTE!

Check idle speed and full load stop positions.

19. Join electric plug connection (1) for engine shut-down together.

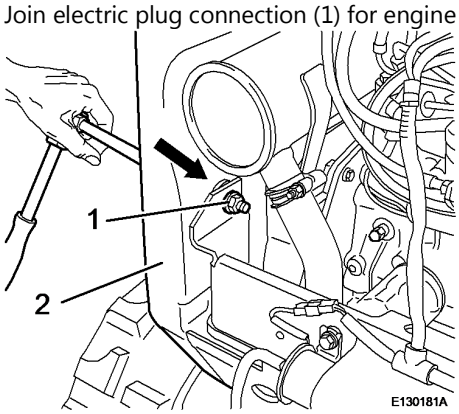

Figure 12

20. Fasten fuel tank (2) with screw (1).
    NOTE!
    Ensure correct fit of the spacer.

21. Fasten the front tank fastening bracket with screw ([Invalid linktarget] /1).

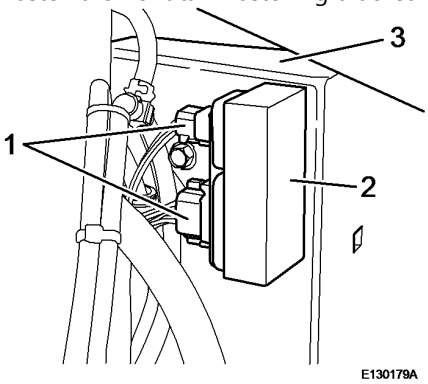

Figure 13

22. Assemble reinforcement plate (3) with immobilizer control unit (2).

23. Join electric plug connections (1) together.

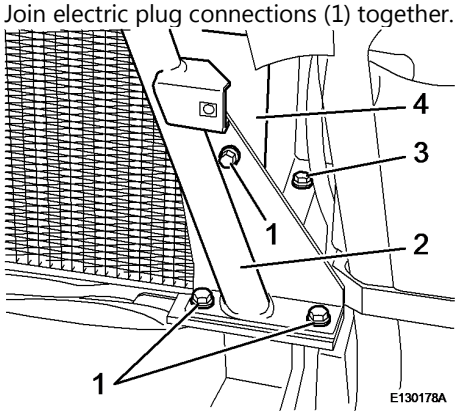

Figure 14

24. Fasten the right hand reinforcement plate (4) with screw (3).

25. Attach bracket (2) and fasten it with screws (1) from both sides.

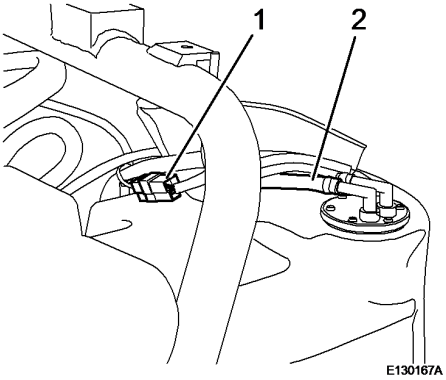

Figure 15

26. Push fuel lines (2) onto fuel sensor.

27. Push ventilation hose onto yoke.

28. Join electric plug connection (1) together.

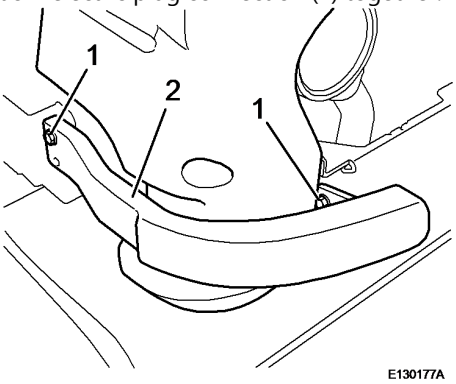

Figure 16

29. Assemble counterweight (2) and fasten with screws (1) on left and right hand side.

30. Insert the foam rubber wedge from underneath behind the right hand counter weight.

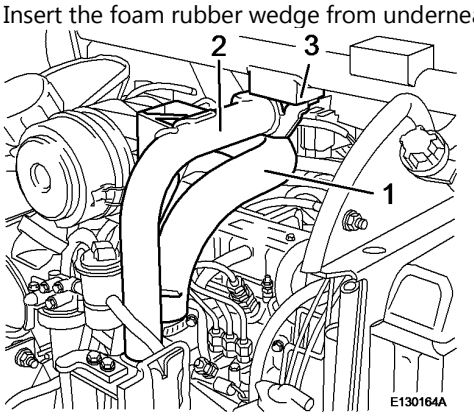

Figure 17

31. Assemble air filter bracket (2) with air filterto bracket (3) and frame.

32. Fasten the air intake hose (2) with a new hose clamp to the air intake pipe.

33. Connect electric cables ([Invalid linktarget] /1) to the air filter contamination indicator ([Invalid linktarget] /2).

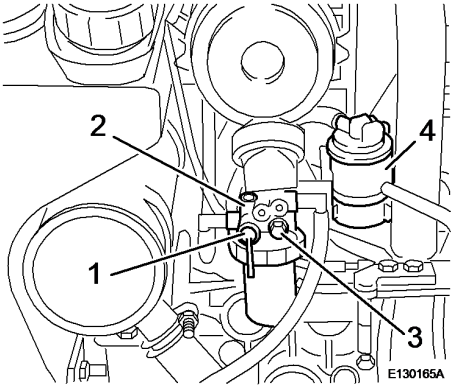

Figure 18

34. Fasten fuel pre-cleaner (2) with screw (3).

35. Set valve lever (1) to position OPEN.

36. Assemble fuel filter (4).

37. Assemble fuel supply and return lines.

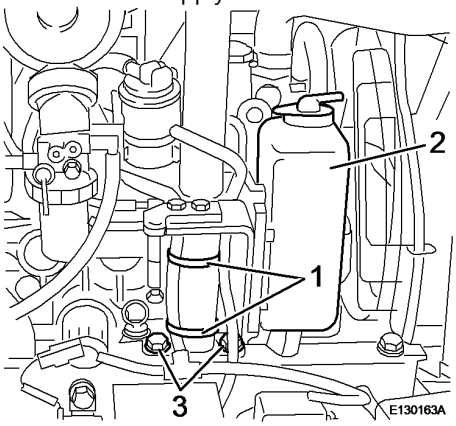

Figure 19

38. Attach compensation tank (2).

39. Fasten the cable set with new cable strap (1).

40. Close the drain plug ([Invalid linktarget] /1) and fill in coolant.
    Filling capacity: approx. 5 litres

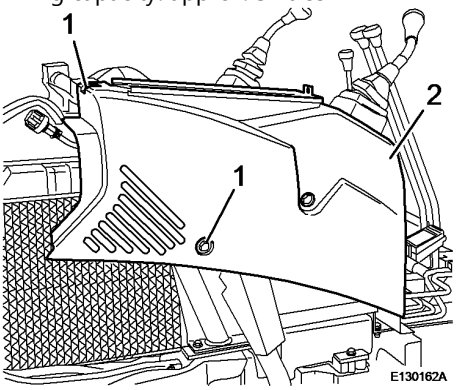

Figure 20

NOTE!
Insert the foam rubber on the right hand reinforcement plate.

41. Apply the right hand top side casing (2), plug in the electric plug connections, assemble the rubber grommet and fasten the side casing with screws (1).

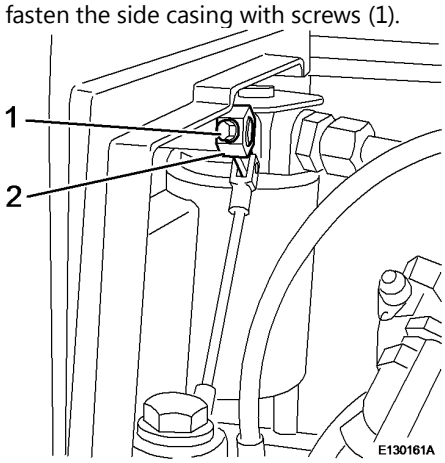

Figure 21

42. Insert the dozer blade control lever from outside, slide on pivot arm (2) and fasten with screw (1).
NOTE!
Insert the foam rubber on the left hand reinforcement plate.

43. Connect ground cable ([Invalid linktarget] /1) to the battery.

44. Assemble the top left hand side casing.

45. Assemble carrier ([Invalid linktarget] /3).

46. Insert the rubber grommet.

47. Insert switch ([Invalid linktarget] /2) into the carrier and plug in the electric plug connections ([Invalid linktarget] /1).

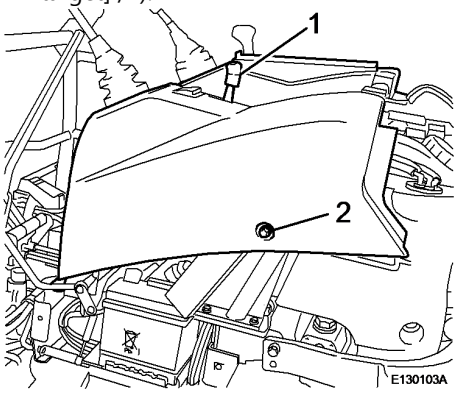

Figure 22

48. Fasten the side casing with screws (2).

49. Assemble rubber handle (1) to the throttle control lever.

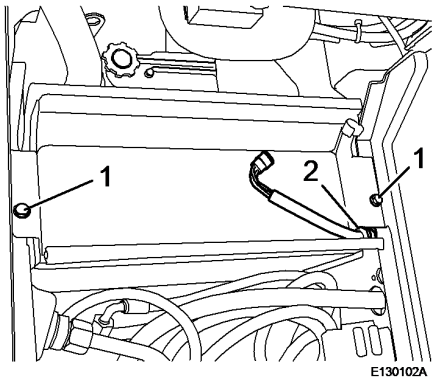

Figure 23

50. Fasten the tool box with screws (1).
    NOTE!
    Ensure correct fit of rubber grommet (2).

51. Assemble the seat with console ([Invalid linktarget]).

52. Assemble roll over protection structure ([Invalid linktarget] and [Invalid linktarget]).

53. Join electric plug connection ([Invalid linktarget] /1) together.

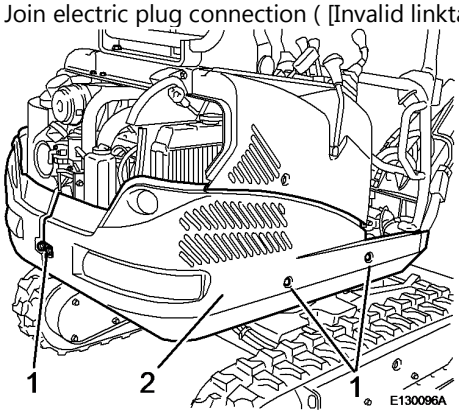

Figure 24

54. Assemble right and left hand side casings (2) with screws (1).

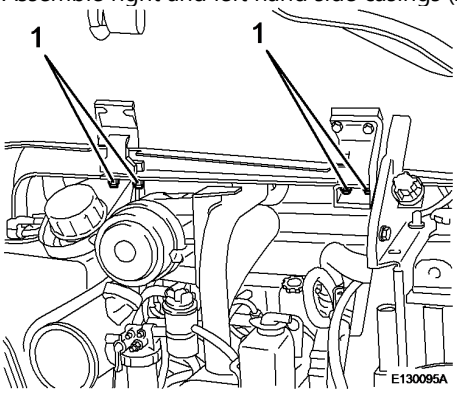

Figure 25

55. Fasten the engine hood with screws (1) and align.

56. Assemble the floor plate.

57. Check engine oil level, top up if necessary

58. Start the engine and make sure that there are no leaks.

Document Title:	Function Group:	Information Type:	Date:
Removing the engine	**200**	**Service Information**	**2014/4/2 0**
Profile:			

Removing the engine

Op nbr 2101

Lifting sling 1 m
Shackle 3/8""

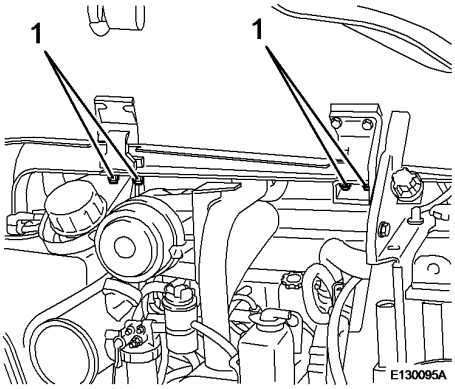

Figure 1

1. Unscrew fastening screws (1).
2. Take off the engine hood.
3. Disassemble the floor plate.

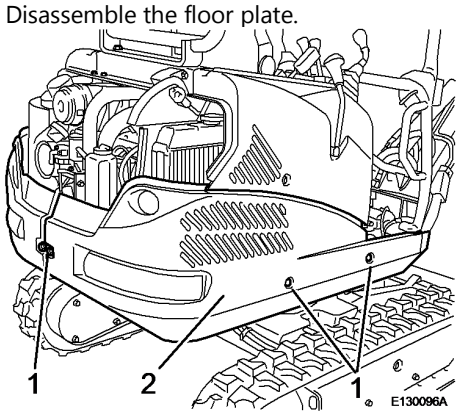

Figure 2

4. Unscrew all screws (1) and remove lower right and left hand side casing (2).

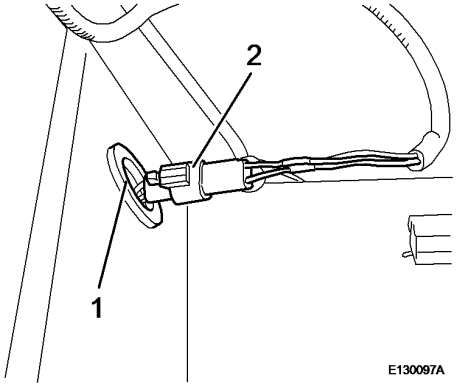

Figure 3

5. Disconnect the electric plug connection (1).

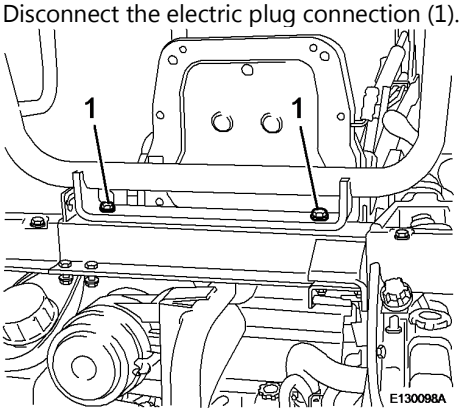

Figure 4

6. Unscrew the rear fastening screws (1) for the roll over protection structure.

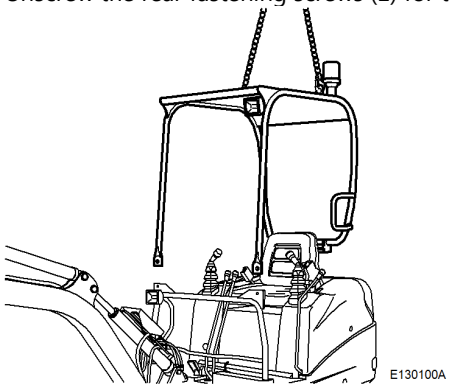

Figure 5

7. Attach the lifting sling to the lifting points of the roll over protection structure and lift the roll over protection structure until the ropes are tight.

8. Unscrew the front fastening screws.

9. Lift the roll over protection structure slightly up, make sure that the area around is safe and lift it off completely.

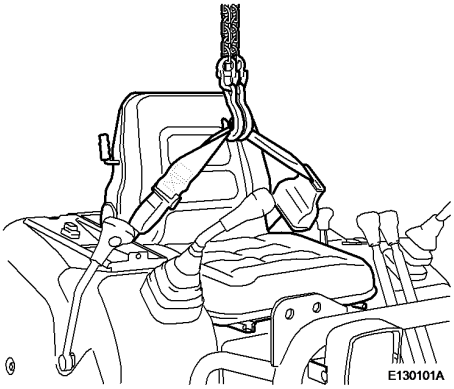

Figure 6

10. Raise the seat console at the front and lift out the driver's seat with the lifting tackle attached to the seat belt.

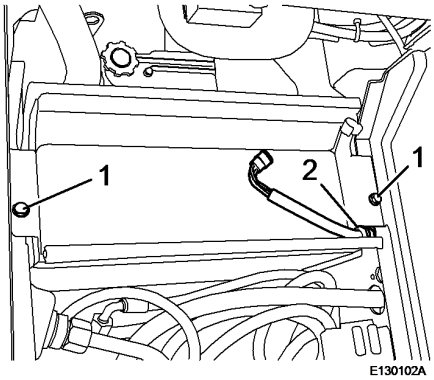

Figure 7

11. Unscrew screws (1) and lift out the tool box.
    NOTE!
    Unhook the rubber grommet with wiring loom (2).

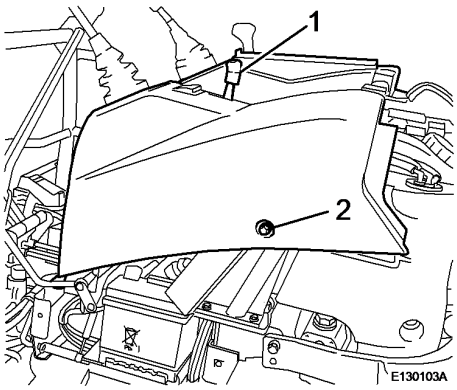

Figure 8

12. Pull rubber handle (1) off the throttle control lever.

13. Unscrew all screws (2).

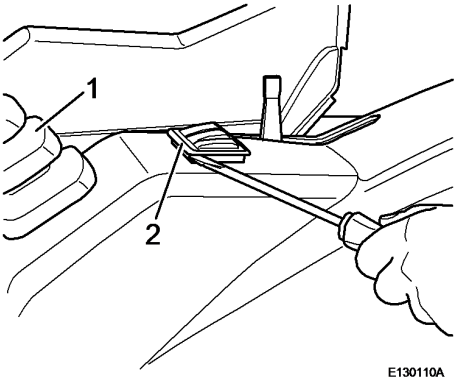

Figure 9

14. Push rubber grommet (1) away from the control lever.

15. Force switch carrier (2) out with a screw driver.

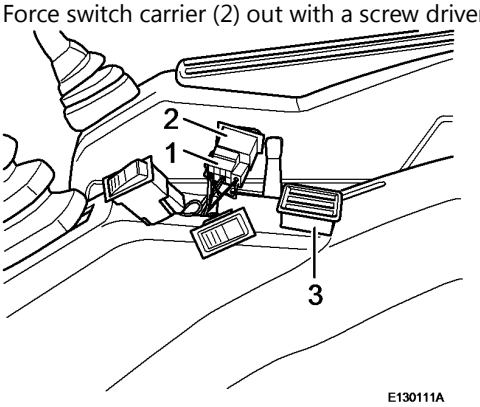

Figure 10

16. Disconnect plug connections (1) from switches (2), take the switches out of carrier (3) and plug the plug connections back on.

17. Disassemble the top left hand side casing.

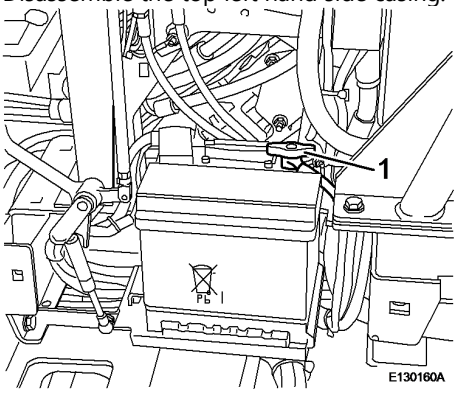

Figure 11

WARNING

Disconnect and connect the battery only with the ignition switched off. Disconnect the minus pole (green fastening) first. During assembly connect the plus pole (red cable) first.

18. Disconnect ground cable (1) from the battery.

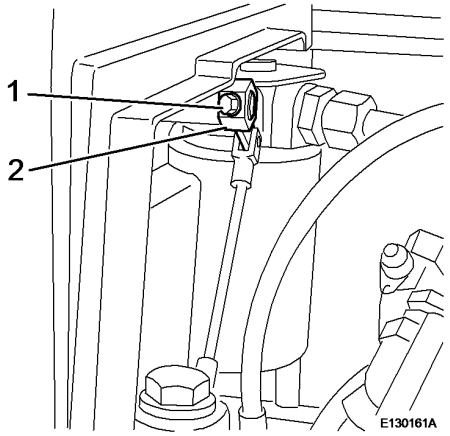

Figure 12

19. Remove screw (1).

20. Pull off pivot arm (2) for dozer blade control lever.

21. Pull the control lever out sideways.

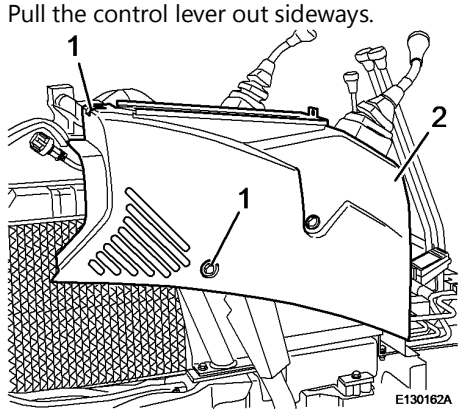

Figure 13

22. Unscrew fastening screws (1), pull off electric plug connections, push the rubber grommet back off the control lever and remove the right hand side casing (2).

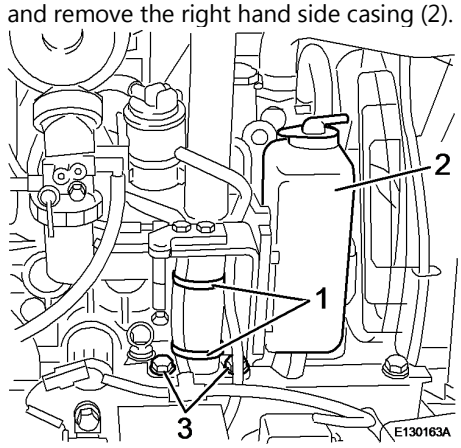

Figure 14

23. Cut both cable straps (1).

24. Remove the compensation tank (2) from the holder.

25. Unscrew screws (3).

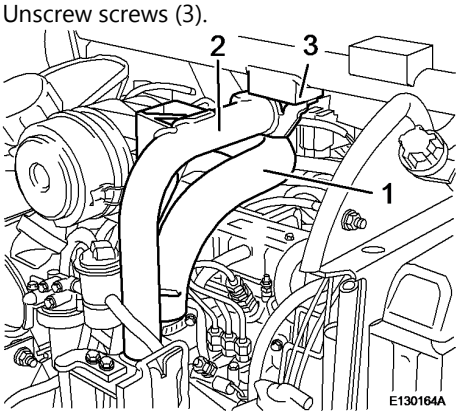

Figure 15

26. Disconnect intake air hose (1) from the air intake pipe and close the opening on the engine with sticky tape.

27. Unscrew the screws from air filter bracket (2) on yoke (3).

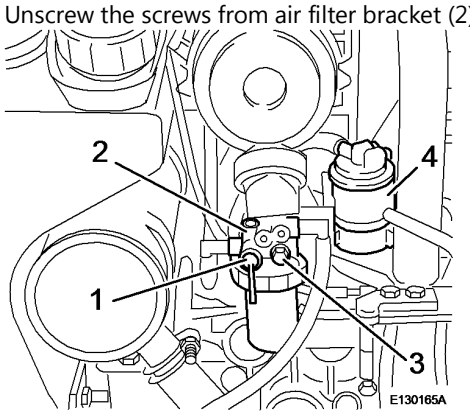

Figure 16

28. Set valve lever (1) on fuel filter (2) to position CLOSED.

29. Disconnect fuel supply and return lines.

30. Unscrew screw (3).

31. Detach fuel filter (4) and lay down to the side.

WARNING

Catch fuel running out and dispose of environmentally.

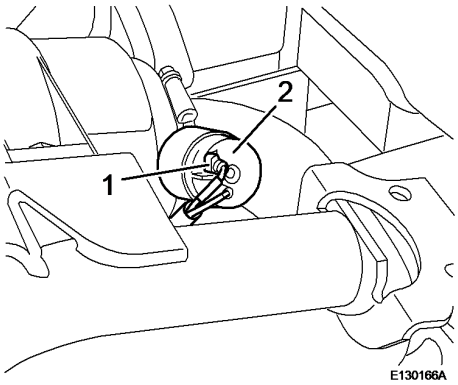

Figure 17

32. Pull electric cables (1) off the air filter contamination indicator (2).

33. Take off the complete air filter bracket.

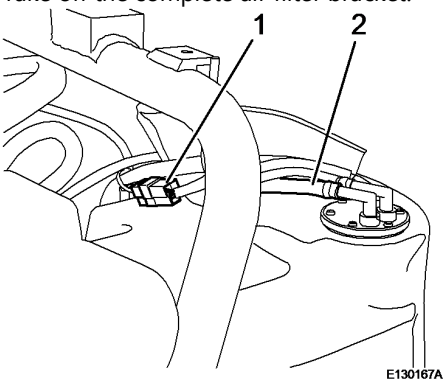

Figure 18

34. Pull electric plug connection (1) for fuel sensor apart.

35. Mark fuel hoses (2) and pull off fuel sensor, disconnect ventilation hose from yoke.

36. Close fuel hoses with plugs.

37. Cut the cable straps for the suction line to the fuel filter and lay the fuel filter to the side.

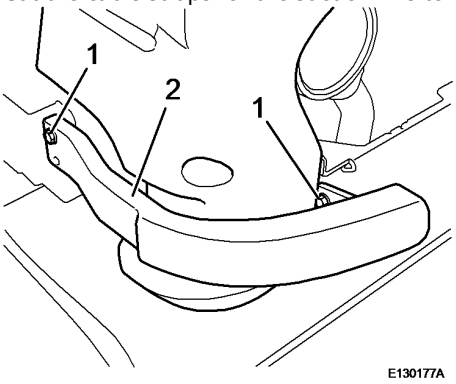

Figure 19

38. Unscrew screws (1) and take off left and right hand counter weights (2).

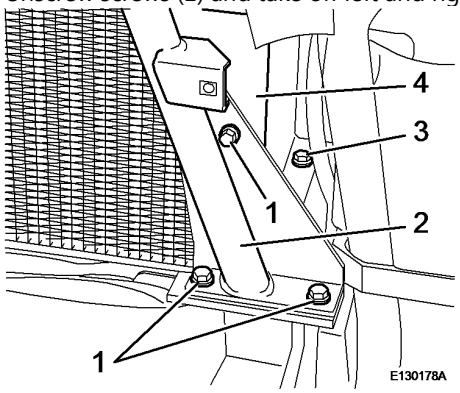

Figure 20

39. Unscrew screws (1) on both sides and take off yoke (2) from above.

40. Unscrew screw (3) and take off reinforcement plate (4).

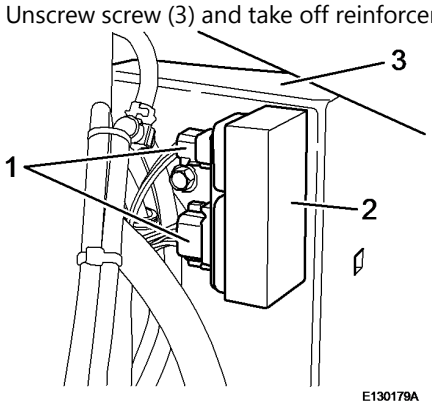

Figure 21

41. Pull electric plug connections (1) of the immobilizer control unit (2).

42. Unscrew the fastening screws for reinforcement plate (3) and take off the reinforcement plate.

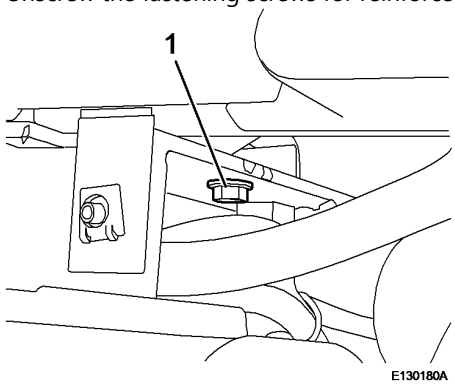

Figure 22

43. Unscrew screw (1) from the front tank fastening bracket.

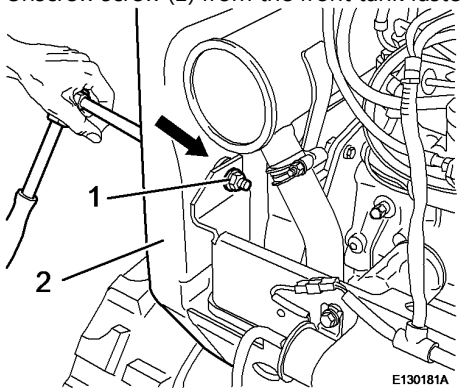

Figure 23

44. Unscrew rear tank fastening screw (1).
    NOTE!
    Minde the shim (arrow) between tank and bracket.

45. Take off fuel tank (2).

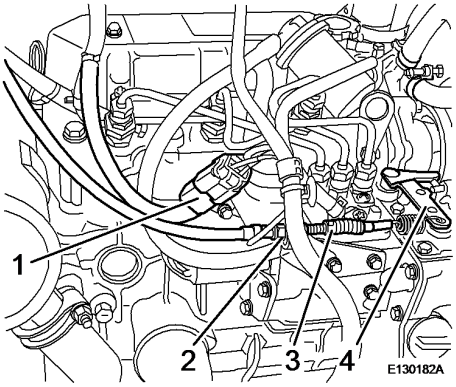

Figure 24

46. Disconnect electric plug connection (1) for engine shutdown and lay the wiring loom to the side.

47. Slacken counter nut (2) and take throttle cable (3) out of the bracket.

48. Unhook throttle cable (3) from injection pump (4).

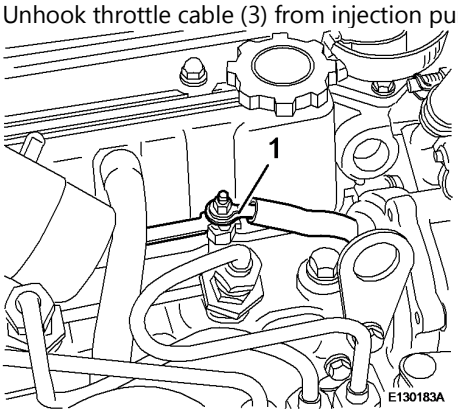

Figure 25

49. Disassemble electric cable (1) for the pre-heating system.

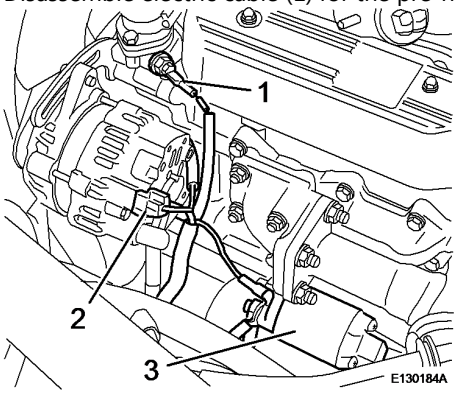

Figure 26

50. Disconnect electric cables from thermal switch (1), generator (2) and starter (3).

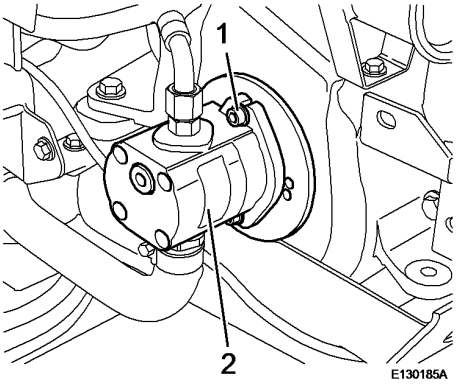

Figure 27

51. Unscrew screws (1) and lay hydraulic pump (2) to the side.

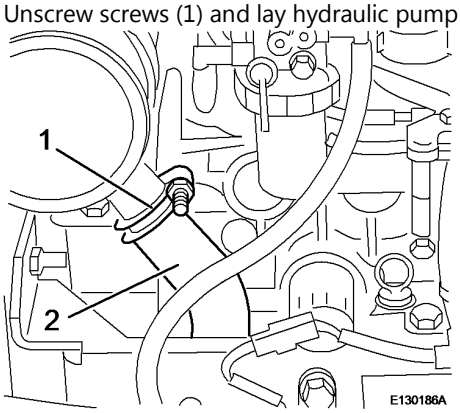

Figure 28

52. Loosen clamp (1) and take off exhaust pipe (2).

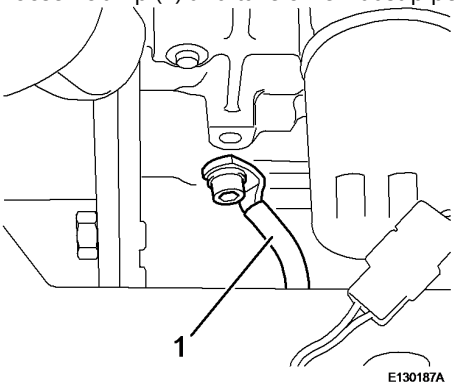

Figure 29

53. Disconnect front ground strap (1) from engine block.

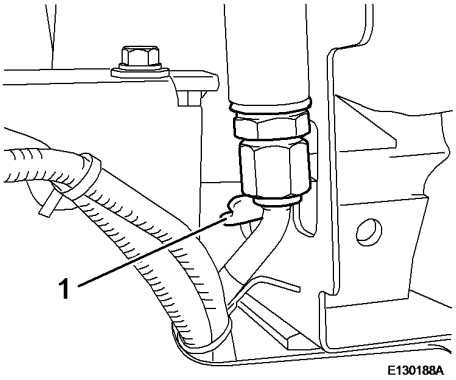

Figure 30

WARNING

When opening the lid of the compensation tank (radiator cap) there is a risk of scalding because of the overpressure in the cooling system. Catch running out coolant and dispose of environmentally.

54. Unscrew drain plug (1), open the radiator cap and drain of all coolant.
    Filling quantity approx. 5 litres.

WARNING

Dispose of collected coolant environmentally.

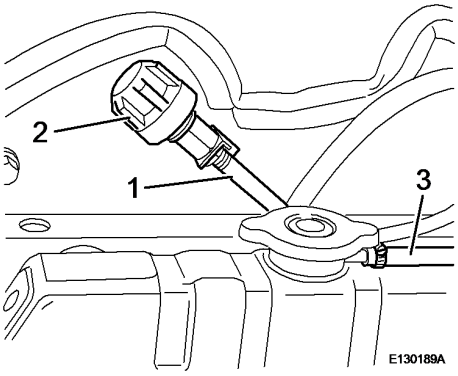

Figure 31

55. Disconnect hose (1) form the hydraulic tank breather valve (2).

56. Pull hose (3) off the radiator filler cap and remove compensation tank with hose.

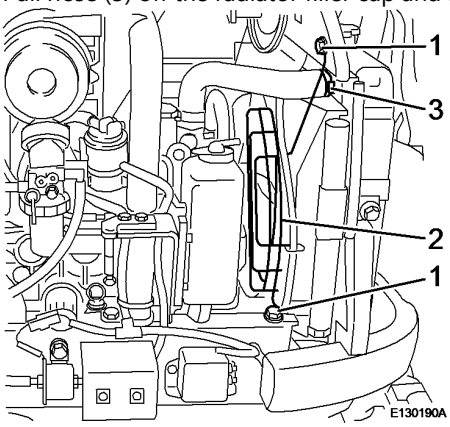

Figure 32

57. Unscrew screws (1) and take off protection grid (2).

58. Loosen hose clamp (3), pull off the top water hose and close it with a plug.

59. Loosen the hose clamp for the bottom water hose and disconnect the water hose from the radiator.

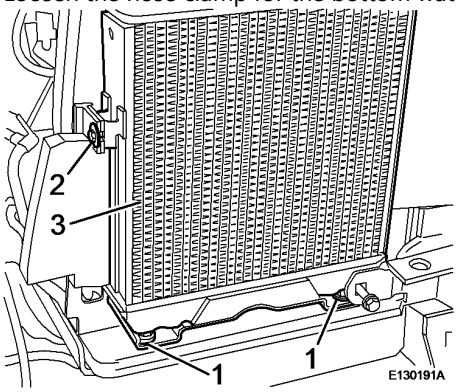

Figure 33

60. Unscrew screws (1).

61. Unscrew screws (2) and take off radiator (3).

62. Lay oil cooler with air baffle to the side.

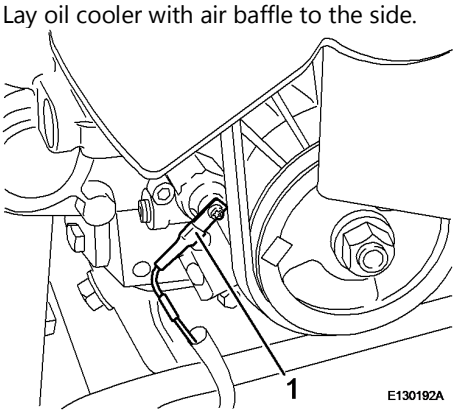

Figure 34

63. Disconnect electric cable (1) from the oil pressure switch.

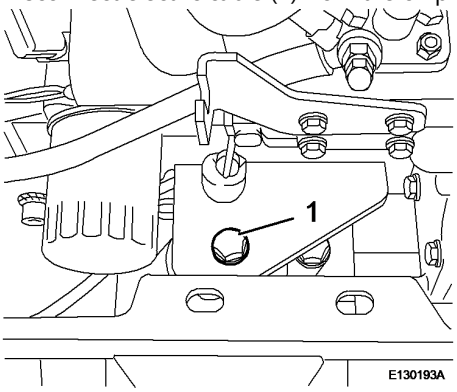

Figure 35

64. Unscrew screws (1) for rear and front engine mounts.

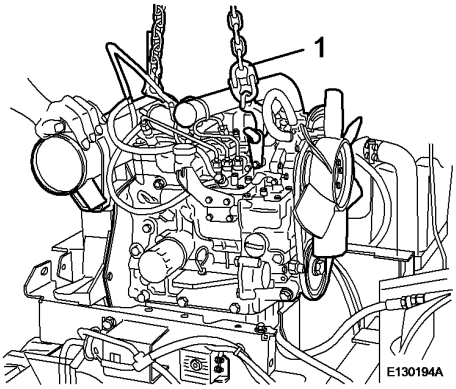

Figure 36

65. Attach lifting tackle (1) to the engine.

66. Lift out the engine.
    Weight approx. 125 kg.
    NOTE!
    Pull the engine slightly back when lifting it out.

Document Title:	Function Group:	Information Type:	Date:
Cooling system	**210**	**Service Information**	**2014/4/2 0**
Profile:			

Cooling system

Engine		**L3E-64ESA**
Fan belt		Type LL or HM (width = 10.7 mm, angle V = 38°, outer circumference = 980 mm
Cooling fan	Pressure fan	Number of blades = 5, Diameter = 360 mm
Water pump		Centrifugal pump
Thermostat	Opening temperature of valve	82 ± 1.5 °C
	Temperature at which the valve stroke is 8 mm	95 °C
Thermoswitch	Type	Bi-metal
	Temperature at which the thermoswitch is set to ON	111 ± 3.5 °C
	Temperature difference for SWITCHING ON/OFF	8 ± 3.5 °C
Resistance in temperature sensor		50 °C: 80 ± 10 Ω 80 °C: 29.5 ± 2.5 Ω 120 °C: 10 ± 0.3 Ω

Document Title:	Function Group:	Information Type:	Date:
Engine performance diagram (measuring values for one hour with fan)	**210**	**Service Information**	**2014/4/2 0**
Profile:			

Engine performance diagram (measuring values for one hour with fan)

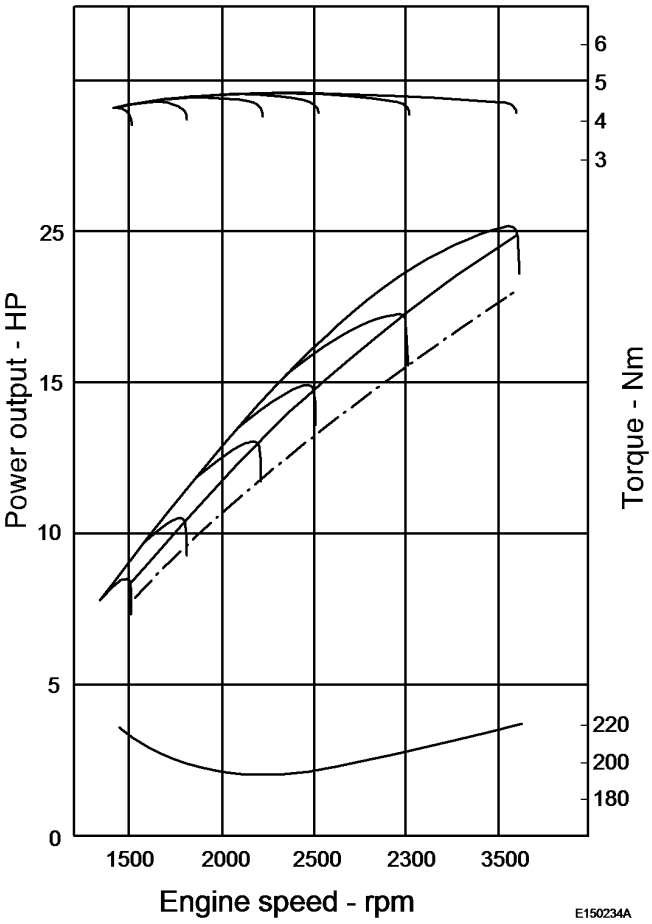

Figure 1

Document Title:	Function Group:	Information Type:	Date:
Specification, engine	**210**	**Service Information**	**2014/4/2 0**
Profile:			

Specification, engine

Type	**EC13XR/XTV**
Engine	L3E-64ESA
Working principle	Four stroke inline diesel engine, water cooled
Firing sequence (injection sequence)	1 - 3 - 2
Compression ratio	23:1
Type of combustion chamber	Swirl chamber
Number of cylinders	3
Bore x stroke, mm	76 x 70
Displacement, cm3	952
Compression pressure	32 bar
Max. permissible pressure deviation between cylinders	3 bar
Idle speed	1050 + 40 rpm
Full speed	2300 + 20 rpm
Installed net power (ISO 9249)	1.1 kW at 2150 rpm
Maximum torque	50 kW at 1800 rpm
Cooling	Centrifugal water pump with temperature control
Air filter	Dry

Document Title:	Function Group:	Information Type:	Date:
Specification, filling capacities	**210**	**Service Information**	**2014/4/2 0**
Profile:			

Specification, filling capacities

Engine, oil change incl. filter	3.6 l

Document Title:	Function Group:	Information Type:	Date:
Specification, weight	**210**	**Service Information**	**2014/4/2 0**
Profile:			

Specification, weight

Engine, standard	125 kg

Document Title:	Function Group:	Information Type:	Date:
Tightening torque	**210**	**Service Information**	**2014/4/2 0**
Profile:			

Tightening torque

Tightening torques engine L3E-64ESA

Tightening torques	**Nm**
Socket head cap screw M10	78 ± 5
Socket head cap screw M8	24.3 ± 5
Rocker cover bolt	11.3 ± 1.5
Screw of rocker arm bracket	18 ± 3.4
Thermoswitch	22 ± 3.9
Crankshaft pulley nut	107 ± 9.75
Main bearing cap bolt	51.5 ± 2.5
Connecting rod cap nut	33 ± 1.5
Flywheel bolt	132 ± 5
Screw for cast iron oil sump	27.5 ± 3
Oil pan drain plug	44 ± 5
Pressure relief valve	49 ± 5
Oil filter	12 ± 1
Oil pressure switch	10 ± 2
Fuel injection pipe nut	29 ± 5
Fuel leak-off pipe nut	27 ± 2.5
Delivery valve holder	44 ± 5
Fuel injection nozzle holder	54 ± 5
Hold-down nut for injection nozzle	37 ± 2.5
Sliding sleeve shaft	35 ± 6
Special nut for torque spring set	20 ± 5
Glow plug	17.2 ± 2.5
Nut for glow plug cable	1.2 ± 0.2
Stop solenoid nut	44 ± 5
Starter B terminal	10.8 ± 1
Nut for rocker arm cover	5.8 ± 1
Injection nozzle holder	54 ± 5
Hold-down nut for injection nozzle	37 ± 2.5
Banjo bolt for injection pump	12 ± 5
Injection pump drain plug	5.8 ± 1
Screw for sheet steel oil sump	11.3 ± 1.5
Bolt for stop plate	10.8 ± 1

Document Title:	Function Group:	Information Type:	Date:
Valve timing	**210**	**Service Information**	**2014/4/2 0**
Profile:			

Valve timing

Valve system	
Valve clearance (warm or cold engine)	
Intake valve	0.25 mm
Exhaust valve	0.25 mm

Document Title:	Function Group:	Information Type:	Date:
Checking the compression pressure	**214**	**Service Information**	**2014/4/2 0**
Profile:			

Checking the compression pressure

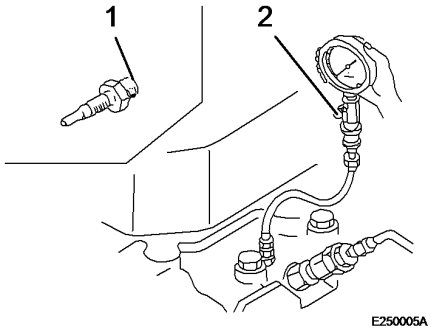

Figure 1

Op nbr

ST332270 Adapter for pressure gauge

1. Set the control lever to a position in which the fuel supply is interrupted.
2. Disassemble all glow plugs and install adapter (1) with pressure gauge (2) to one of the cylinders.
3. Crank the engine with the starter.

   Compression pressure: 25...32 bar

   The measured compression pressure depends on the starter speed during the measuring process and the altitude of the engine location.

   Limit values can therefore not determined precisely. The compression pressure measurement is only recommended as a comparison measurement between all cylinders of an engine. If the detected deviation is higher than 10% the respective cylinder units should be dismantled to detect the cause.
4. Insert all glow plugs and tighten with 17.2 ± 2.5 Nm.

Document Title:	Function Group:	Information Type:	Date:
Miscellaneous	**214**	**Service Information**	**2014/4/2 0**
Profile:			

Miscellaneous

Adjusting the valves

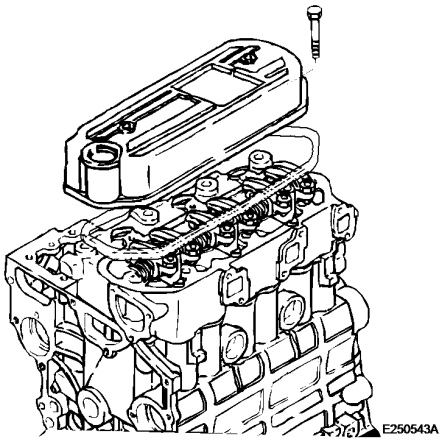

Figure 1

Op nbr 21412

NOTE!
Clean the area around the rocker cover before starting adjustment work.

1. Pull off the hose for crankcase ventilation.

2. Remove the cylinder head cover.

3. Crank the engine until the valves are overlapping.
   NOTE!
   Overlapping of valves means: Exhaust valve not yet closed, intake valve starts to open. In this situation the push rods cannot be turned.

   Position I

Cylinder 1	Overlapping of valves	
Cylinder 2	Intake valve	adjust
Cylinder 3	Exhaust valve	adjust

   Position II

   Turn crankshaft one full turn
   (360 Grad) further in direction of engine rotation

Cylinder 1	Intake valve	adjust
Cylinder 1	Exhaust valve	adjust
Cylinder 2	Exhaust valve	adjust

Cylinder 3	Intake valve	adjust

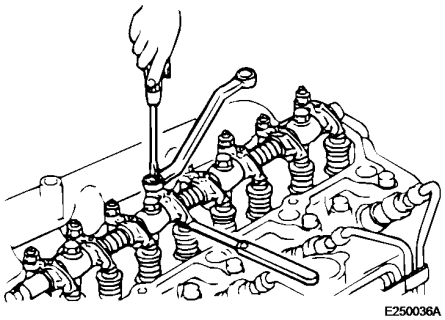

Figure 2

4. Adjust the valve clearance on the respective cylinder using a feeler gauge ([Invalid linktarget])
5. Tighten the counter nut. Check the adjustment again with the feeler gauge.
6. Attach the gasket to the rocker cover.
7. Install the rocker cover. Tighten the screws with a torque of 11.3 Nm.
8. Push on the crankcase ventilation hose.

Document Title: **Description**	Function Group: **220**	Information Type: **Service Information**	Date: **2014/4/2 0**
Profile:			

Description

- The oil pump delivers pressurized engine oil to lubricate the contact faces of moving parts, such as crankshaft, camshaft, intake/exhaust valves, rockers and engine timing gears.

Schematic flow of lubrication oil

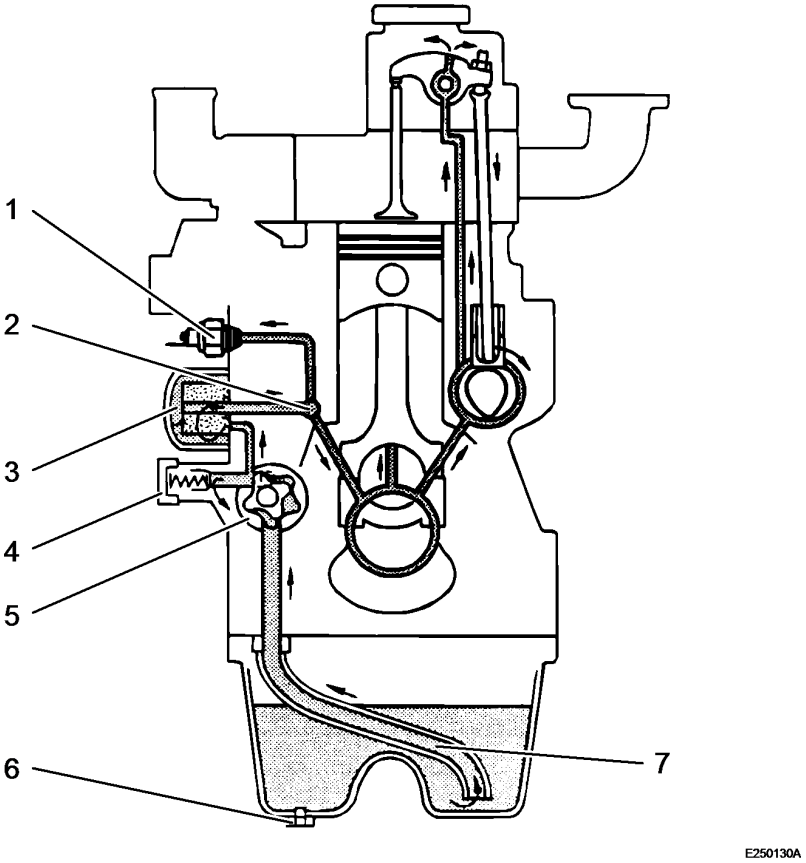

Figure 1

1. Oil pressure switch
2. Main oil gallery
3. Oil filter
4. Pressure relief valve
5. Oil pump
6. Oil drain plug
7. Oil screen

Document Title:	Function Group:	Information Type:	Date:
Description	**230**	**Service Information**	**2014/4/2 0**
Profile:			

Description

The electric fuel pump (1) draws fuel from the tank through fuel pre-filter (2) and presses it through fuel filter (3) to injection pump (4). The fuel circuit is equipped with an automatic bleeding system.

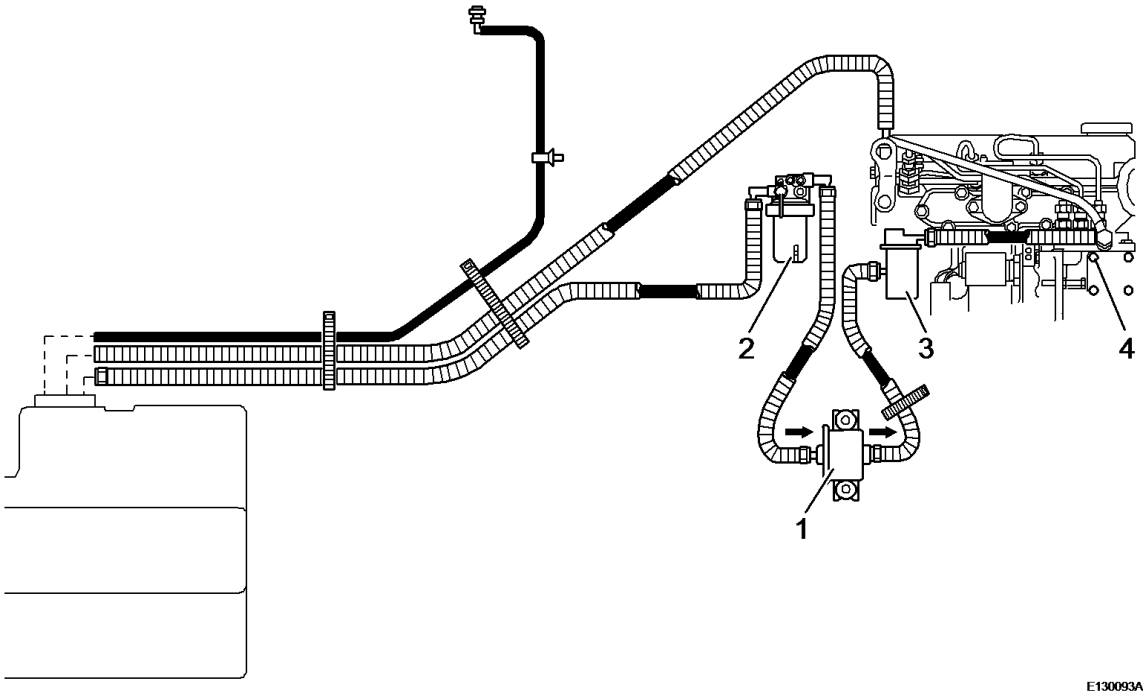

Figure 1

1. Electric fuel pump
2. Fuel pre-filter
3. Fuel filter
4. Injection pump

Document Title:	Function Group:	Information Type:	Date:
Bleeding the fuel system	**233**	**Service Information**	**2014/4/2 0**
Profile:			

Bleeding the fuel system

Op nbr

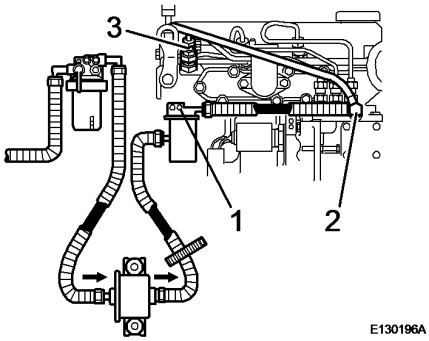

Figure 1

WARNING

Catch fuel running out and dispose of environmentally.

1. Slacken bleeding screws (1 and 2).
2. Start the engine, until fuel runs out of the bleeding screws without air bubbles.
3. Tighten the bleeding screws.
   NOTE!
   When working on the injection nozzels, these must be bled separately.
4. Loosen connections (3) on the injection lines.
5. Start the engine, until fuel runs out of the injection lines without air bubbles.
6. Tighten connections (3).

VOLVO
Construction Equipment

Service Information

Document Title:	Function Group:	Information Type:	Date:
Changing the fuel filter	**233**	**Service Information**	**2014/4/2 0**
Profile:			

Changing the fuel filter

Op nbr 2334

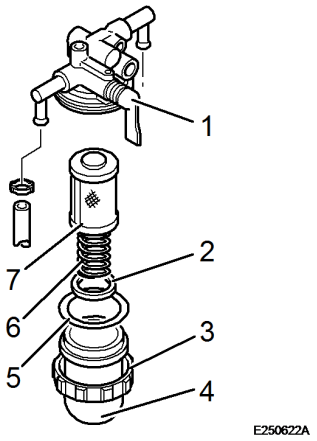

Figure 1

NOTE!
Ring (2) indicates the condensation water level in the pre-filter, drain condensation water off if level is too high.

1. Close fuel cock (1).

   WARNING

   Catch fuel running out and dispose of environmentally.

2. Slacken ring nut (3), take off and empty water separator (4).

3. Take out filter (7) and spring (6).

4. Check condition of seal (5), replace if necessary.

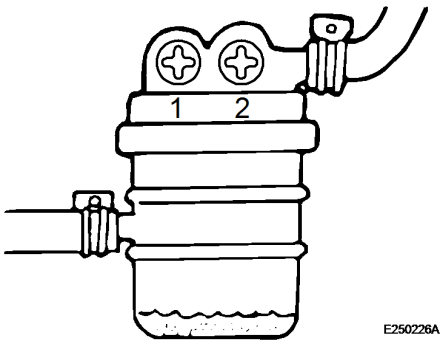

Figure 2
Fuel filter with element

Changing the fuel filter element

Op nbr 23341

1. Loosen the clamps.
2. Pull off fuel hoses.
3. Take fuel filter element out of elastic bracket and change.

   WARNING

   Dispose of fuel filter in compliance with environmental legislation.

Document Title:	Function Group:	Information Type:	Date:
Disassembling the fuel pump	**233**	**Service Information**	**2014/4/2 0**
Profile:			

Disassembling the fuel pump

Op nbr 2331

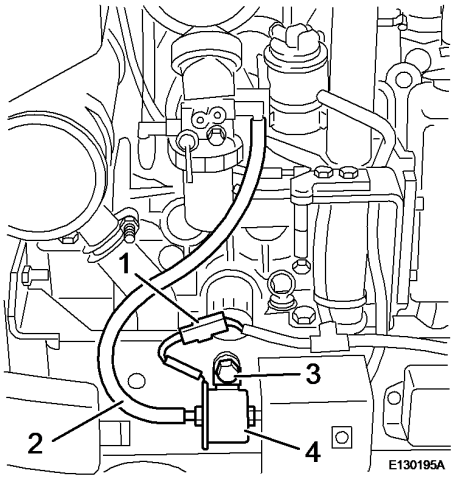

Figure 1

1. Open the engine hood.
2. Remove the side casing from the bottom left hand side.
3. Disconnect plug connection (1).
4. Disassemble fuel hoses (2).
5. Unscrew both screws (3) and take fuel pump (4) off.

Document Title:	Function Group:	Information Type:	Date:
Installing the fuel pump	**233**	**Service Information**	**2014/4/2 0**
Profile:			

Installing the fuel pump

Op nbr 2331

1. Fasten new fuel pump (4) with screws (3) to the frame.
2. Mount fuel hoses (2) with new hose clamps.
3. Join plug connection (1) together.
4. Assemble the side casing on the bottom left hand side.
5. Bleed the fuel system.
6. Start the engine and make sure that there are no leaks.

Document Title:	Function Group:	Information Type:	Date:
Assembling the fuel injection line	**235**	**Service Information**	**2014/4/2 0**
Profile:			

Assembling the fuel injection line

Op nbr 235

1. Fasten leak fuel return line (2) to injection pump (3) and injection nozzle (4).
2. Fasten the fuel injection line to injection pump (3) and injection nozzle (4).
3. Fasten the fuel injection line with clamps.

Document Title:	Function Group:	Information Type:	Date:
Disassembling the fuel injection line	**235**	**Service Information**	**2014/4/2 0**
Profile:			

Disassembling the fuel injection line

Op nbr 235

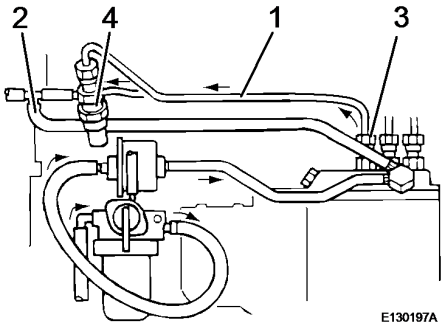

Figure 1
Fuel injection lines

1. Loosen and disconnect fuel injection lines (1) and leak fuel return lines (2) from injection pump (3) and injection nozzles (4).
   NOTE!
   Close the openings on nozzle connections and injection pump with plugs or caps.

Document Title:	Function Group:	Information Type:	Date:
Idle speed, inspection and adjustment	**238**	**Service Information**	**2014/4/2 0**
Profile:			

Idle speed, inspection and adjustment

Op nbr

Tachometer

For inspection:
Normal operating temperature.
Mayor current consumptionand a possible air conditioning system must be switched off.

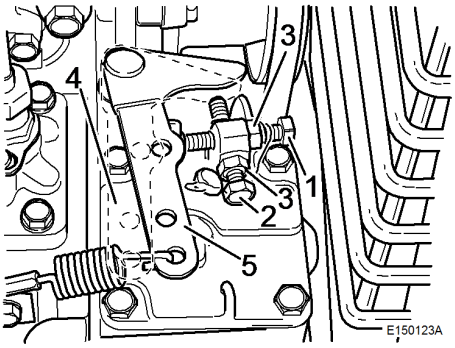

Figure 1
Adjusting idle speed

1. Setscrew, low idle speed
2. Setscrew, high idle speed (sealed)
3. Counter nut
4. High idle speed
5. Low idle speed

Low idle speed, inspection, adjustment

1. Make sure, that the control lever touches setscrew (1). Start the engine and read low idle speed.
   Low idle speed:**1050 + 40 rpm**
   Turn setscrew (1) to adjust (5). After adjustment secure the setscrew with counter nut (3) and check the speed again.
   NOTE!
   Adjustments on a sealed pump must only be performed in a diesel workshop authorized by Bosch.

High idle speed, inspection, adjustment

2. Check, with engine shut down and throttle pedal fully actuated, whether the control lever movement is limited by setscrew (2), see [Invalid linktarget] . Start the engine, fully kick down the throttle pedal and read high idle speed.
   High idle speed,**2300 ± 20 rpm**
   The adjustment (4) is made with setscrew (2), after breaking the seal.
   After the adjustment secure the setscrew (2) with counter nut (3) and check the speed again.
   Seal setscrew and nut.

Document Title:	Function Group:	Information Type:	Date:
Schematic	**251**	**Service Information**	**2014/4/2 0**
Profile:			

Schematic

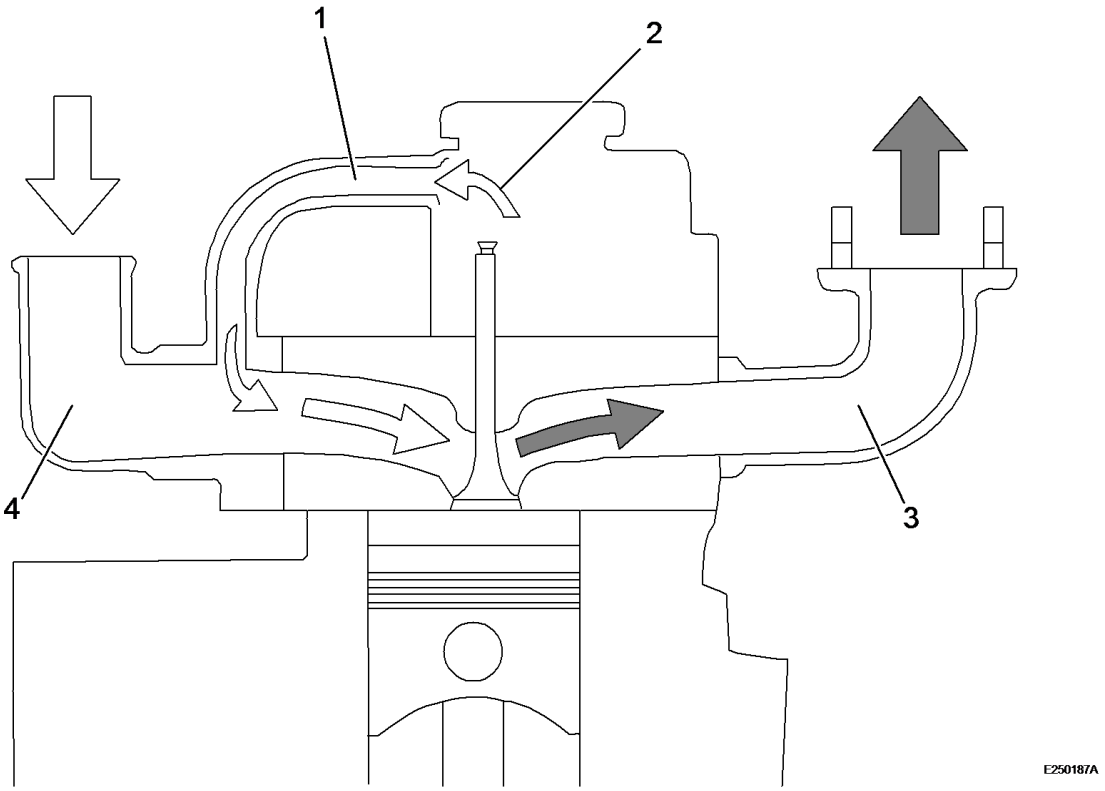

Figure 1

1. Ventilation line for exhaust gas recirculation
2. Exhaust gases
3. Exhaust manifold
4. Air intake cover

Document Title:	Function Group:	Information Type:	Date:
Schematic	**261**	**Service Information**	**2014/4/2 0**
Profile:			

Schematic

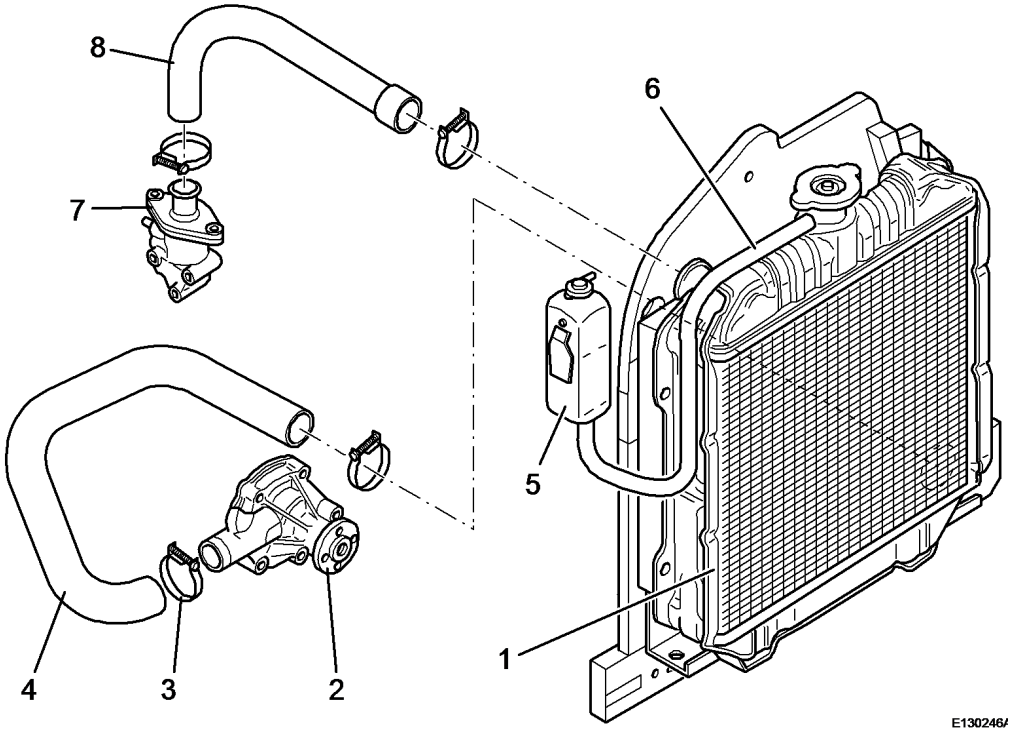

Figure 1

1. Radiator
2. Water pump
3. Clamp
4. Bottom coolant hose
5. Compensation tank
6. Overflow hose
7. Thermostat
8. Top water hose

Document Title:	Function Group:	Information Type:	Date:
Removing the radiator	**261**	**Service Information**	**2014/4/2 0**
Profile:			

Removing the radiator

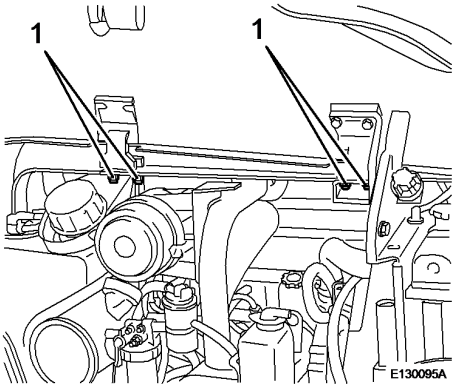

Figure 1

Op nbr 2611

Lifting sling 1 m
Shackle 3/8""

1. Unscrew fastening screws (1).
2. Take off the engine hood.
3. Disassemble the floor plate.

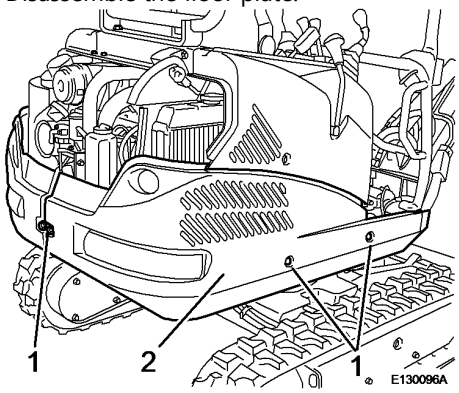

Figure 2

4. Unscrew all screws (1) and remove lower right side casing (2).

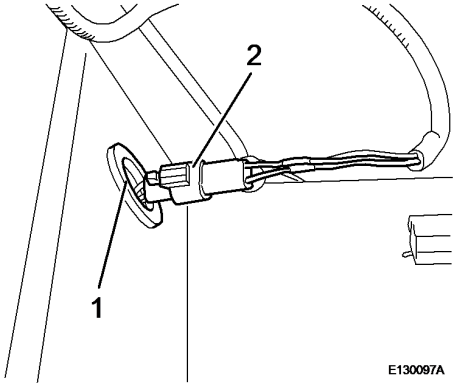

Figure 3

5. Disconnect the electric plug connection (1).

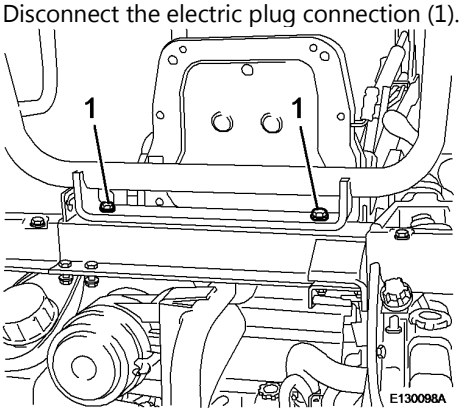

Figure 4

6. Unscrew the rear fastening screws (1) for the roll over protection structure.

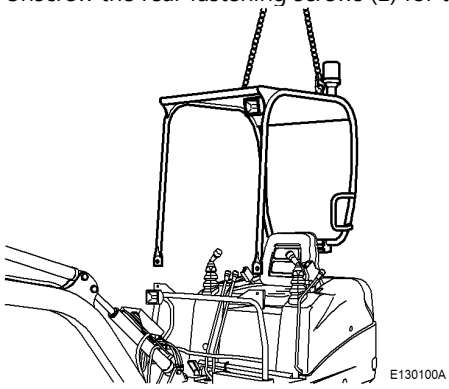

Figure 5

7. Attach the lifting sling to the lifting points of the roll over protection structure and lift the roll over protection structure until the ropes are tight.

8. Unscrew the front fastening screws.

9. Lift the roll over protection structure slightly up, make sure that the area around is safe and lift it off completely.

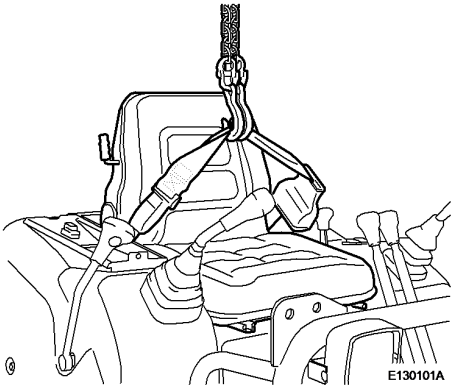

Figure 6

10. Raise the seat console at the front and lift out the driver's seat with the lifting tackle attached to the seat belt.

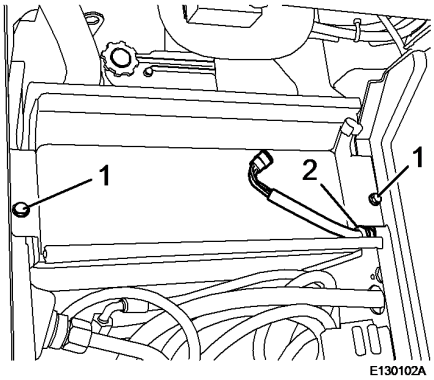

Figure 7

11. Unscrew screws (1) and lift out the tool box.
    NOTE!
    Unhook the rubber grommet with wiring loom (2).

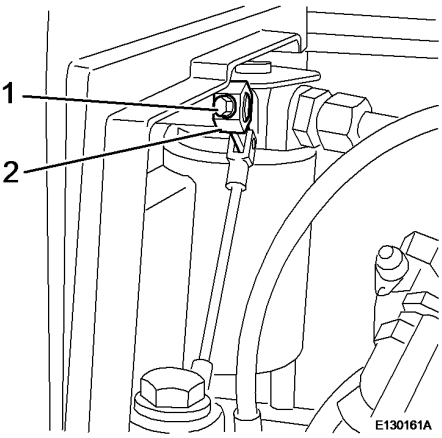

Figure 8

12. Remove screw (1).

13. Pull off pivot arm (2) for dozer blade control lever.

14. Pull the control lever out sideways.

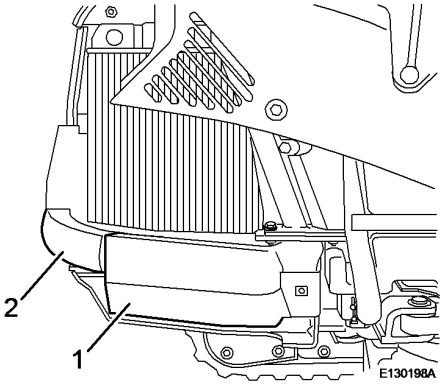

Figure 9

15. Remove the foam rubber wedge (1).

16. Disassemble the right hand counter weight (2).

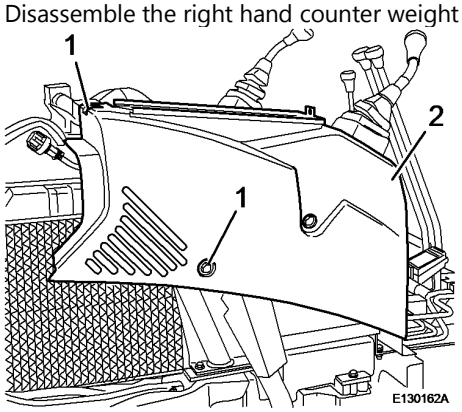

Figure 10

17. Unscrew fastening screws (1), pull off electric plug connections, push the rubber grommet back off the control lever and remove the right hand side casing (2).

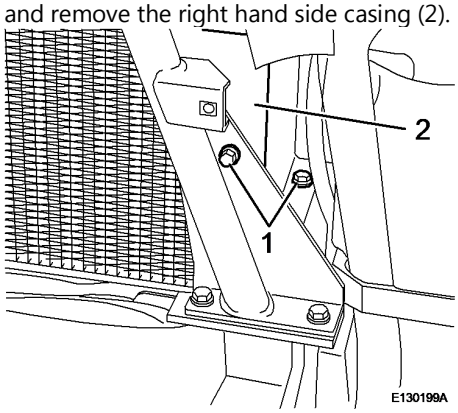

Figure 11

18. Unscrew screw (1) and take off reinforcement plate (2).

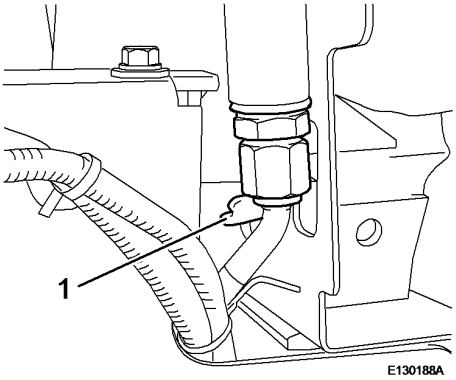

Figure 12

WARNING

When opening the lid of the compensation tank (radiator cap) there is a risk of scalding because of the overpressure in the cooling system. Catch running out coolant and dispose of environmentally.

19. Unscrew drain plug (1), open the radiator cap and drain of all coolant.
    Filling quantity approx. 5 litres.

WARNING

Dispose of collected coolant environmentally.

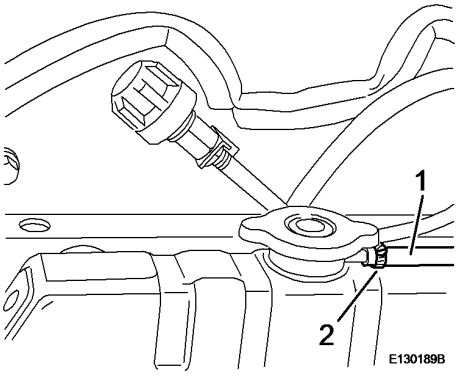

Figure 13

20. Loosen hose clamp (2) and pull hose (1) off the radiator filler socket.

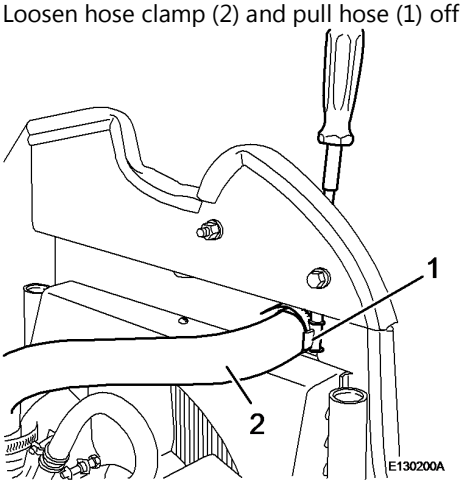

Figure 14

21. Loosen hose clamp (1) and pull off the top water hose (2).

22. Loosen hose clamp and pull the bottom water hose off the radiator.
    NOTE!
    Close both water hoses with plugs.

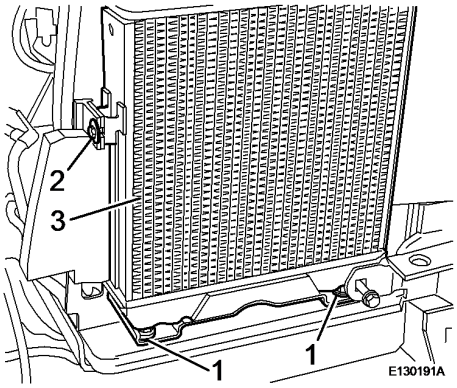

Figure 15

23. Unscrew screws (1).

24. Unscrew screws (2) and take off radiator (3).

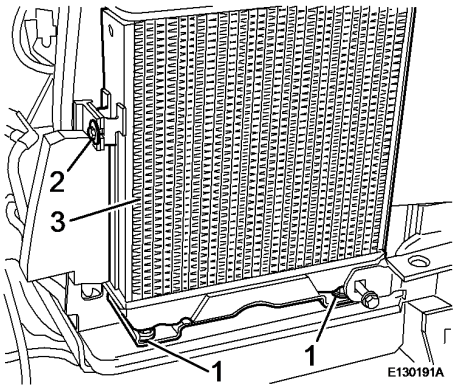

Figure 16

Assembling the radiator

Op nbr 2611

Lifting sling 1 m
Shackle 3/8""

1. Attach radiator (3) from the side.

2. Turn in all screws (1 and 2) and tighten with 24 ± 5 Nm.

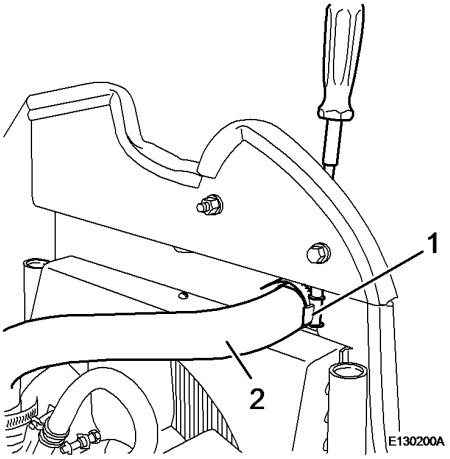

Figure 17

3. Remove the plugs from the water hoses.

4. Assemble top and bottom water hoses (2) with new hose clamps (1) to the radiator.

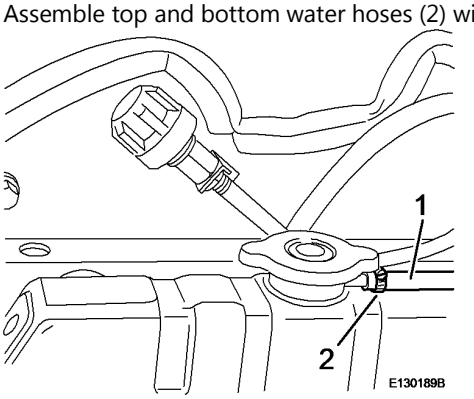

Figure 18

5. Fasten hose (1) to the radiator filling socket with a new hose clamp (2).

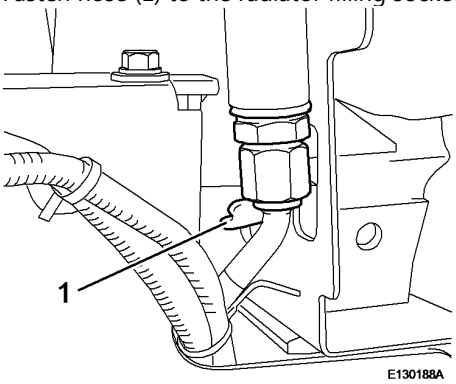

Figure 19

6. Check drain tap (1) for tight fit.

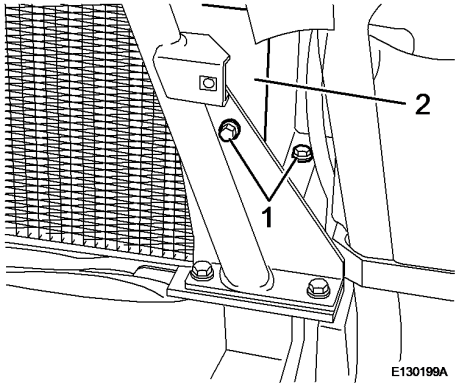

Figure 20

7. Fasten reinforcement plate (2) with screws (1).
   NOTE!
   Insert the foam rubber on the right hand reinforcement plate.

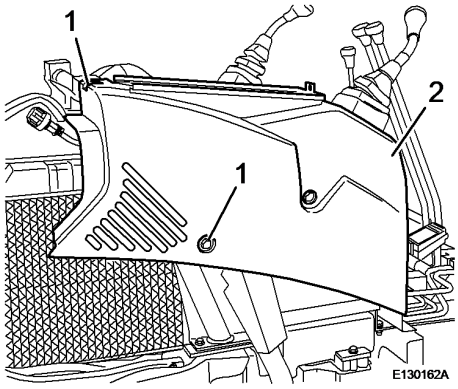

Figure 21

8. Apply the right hand top side casing (2), plug in the electric plug connections, assemble the rubber grommet and fasten the side casing with screws (1).

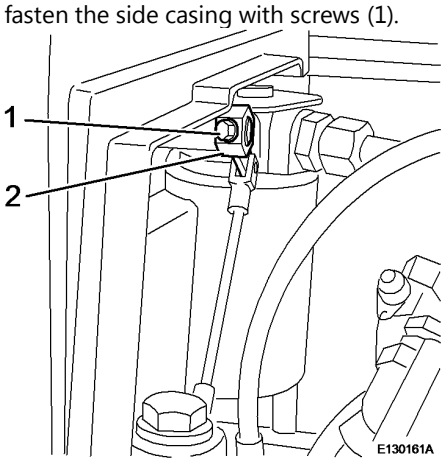

Figure 22

9. Insert the dozer blade control lever from outside, slide on pivot arm (2) and fasten with screw (1).

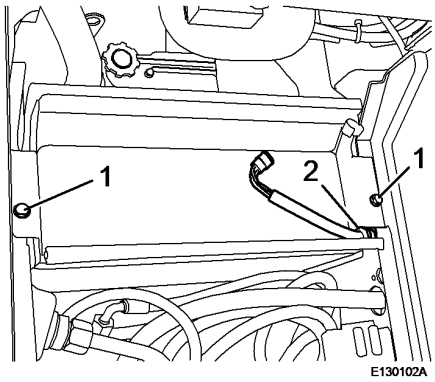

Figure 23

10. Fasten the tool box with screws (1).
    NOTE!
    Ensure correct fit of rubber grommet (2).

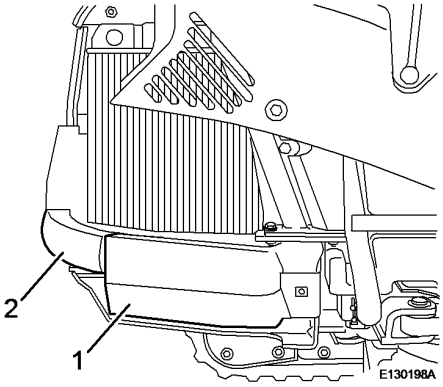

Figure 24

11. Assemble the right hand counter weight (2).

12. Insert the foam rubber wedge (1).

13. Assemble the seat with console ([Invalid linktarget]).

14. Assemble roll over protection structure ([Invalid linktarget] and [Invalid linktarget]).

15. Join electric plug connection ([Invalid linktarget] /1) together.

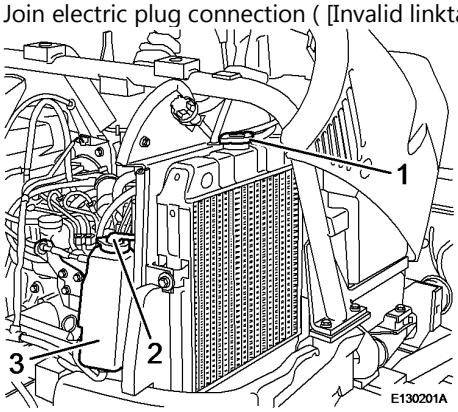

Figure 25

16. Fill in coolant:

Open caps (1 and 2). Take reservoir (3) out of bracket and lift it up. Fill coolant into reservoir (3), until fluid starts to flow out of radiator opening (1) without air bubbles. Close cap (1). Place reservoir (3) into the bracket and fill in coolant up to the mark. Close cap (2).

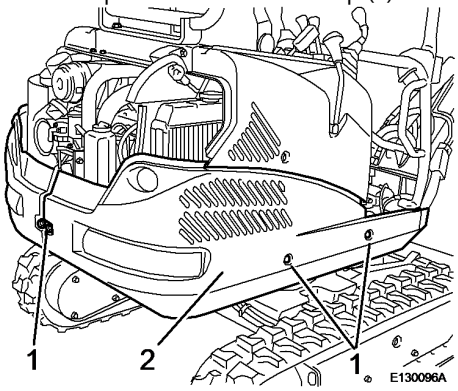

Figure 26

17. Assemble right hand side casings (2) with screws (1).

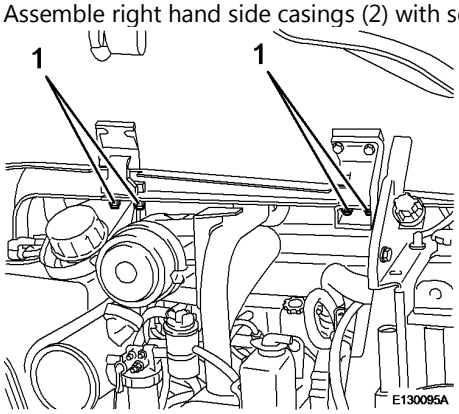

Figure 27

18. Fasten the engine hood with screws (1) and align.

19. Assemble the floor plate.

20. Check coolant level, top up if necessary

21. Start the engine and make sure that there are no leaks.

VOLVO
Construction Equipment

Service Information

Document Title:	Function Group:	Information Type:	Date:
Changing the V-belt	**262**	**Service Information**	**2014/4/2 0**
Profile:			

Changing the V-belt

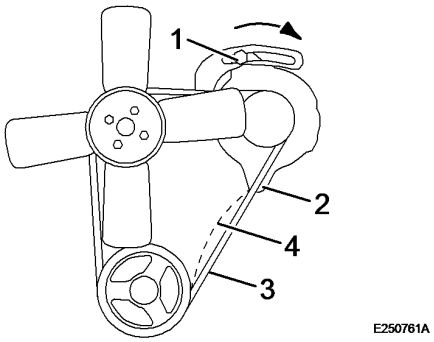

Figure 1
Tensioning the V-belt

1. Screw
2. Screw
3. V-belt
4. Tightness test 12 mm

Op nbr 262106

1. Slacken screws (1 and 2).
2. Press the generator in opposite direction of the arrows, until the V-belt can be taken off.
3. Install a new V-belt (3).
4. Press the generator in direction of arrow, until the correct V-belt tension is reached.
   With correct V-belt tension it should be possible to compress the V-belt with high force for approx. 12 mm (4).
5. Retighten screws (1 and 2).

Document Title:	Function Group:	Information Type:	Date:
Removing the coolant pump	**262**	**Service Information**	**2014/4/2 0**
Profile:			

Removing the coolant pump

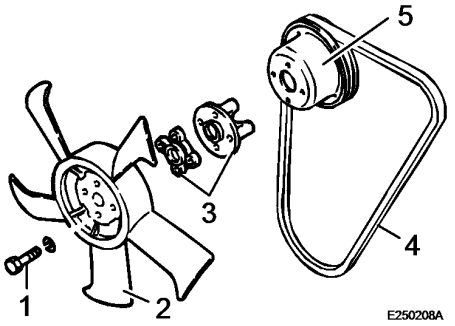

Figure 1

1. Screws
2. Fan
3. Intermediate pieces
4. V-belt
5. V-belt pulley

Op nbr 2621

1. Hold the fan and unscrew the screws.

2. Take off fan, intermediate pieces, V-belt and V-belt pulley.

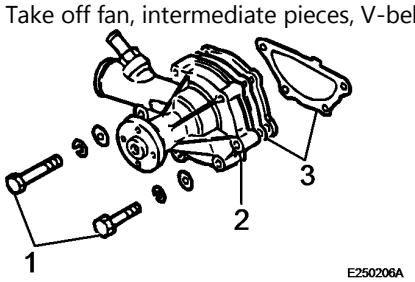

Figure 2

1. Screws
2. Water pump
3. Seal

3. Disconnect the hoses from the coolant pump.
   NOTE!
   Clamp the hoses with clamping pliers to prevent the coolant from running out of the hoses.

4. Unscrew the screws for the coolant pump and take the coolant pump off.

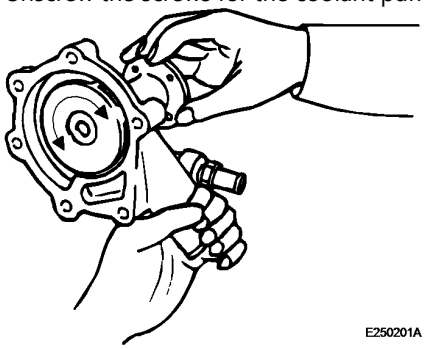

Figure 3
Checking the water pump

5. Turn the shaft of the coolant pump and check for noise and smooth running, replace if necessary.

Assembling the coolant pump

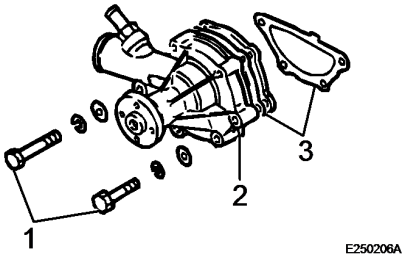

Figure 4

1. Screws
2. Water pump
3. Seal

Op nbr 2621

1. Fasten the coolant pump with gasket, plate and second gasket to the engine block.

2. Connect the hoses with the ports on the cooling pump.

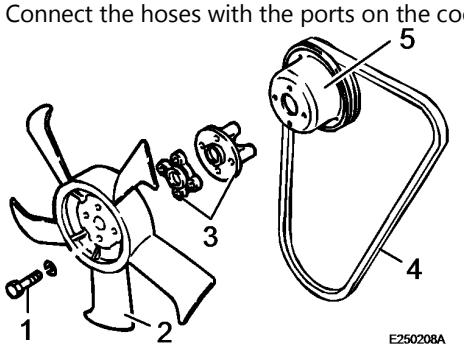

Figure 5

1. Screws
2. Fan
3. Intermediate pieces
4. V-belt

5. V-belt pulley

3. Mount intermediate pieces (3) to fan (2).

4. Attach V-belt pulley (5) to the coolant pump.

5. Fasten the fan with screws (1) to the V-belt pulley.

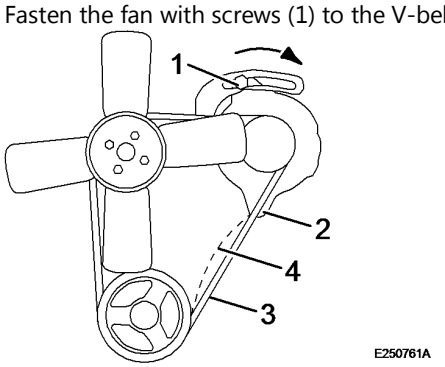

Figure 6

1. Screws
2. Screws
3. V-belt
4. Tightness test 12 mm

6. Assemble the coolant pump V-belt and adjust the V-belt tension.
   With correct V-belt tension it should be possible to compress the V-belt with high force for approx. 12 mm (4).

7. Start the engine and make sure that there are no leaks.

8. Check the coolant level. Fill up if necessary.

Document Title: **Removing the thermostat housing**	Function Group: **262**	Information Type: **Service Information**	Date: **2014/4/2 0**
Profile:			

Removing the thermostat housing

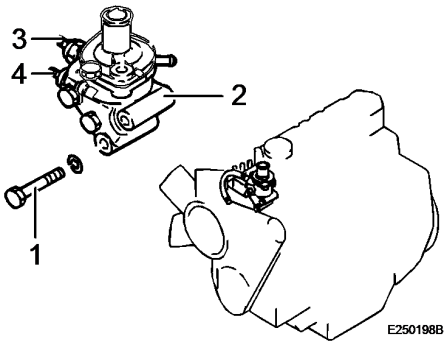

Figure 1
Removing the thermostat housing

1. Screw
2. Thermostat housing
3. The temperature sensor has two flags
4. The thermal switch has one flag

Op nbr

1. Disconnect the hose from the cover.

2. Disconnect the hoses from the thermostat housing.
   NOTE!
   Clamp the hoses with clamping pliers to prevent the coolant from running out of the hoses.

3. Pull the electric cable off the temperature sensor.

4. Remove screws (1) from the thermostat housing and take the thermostat housing off.

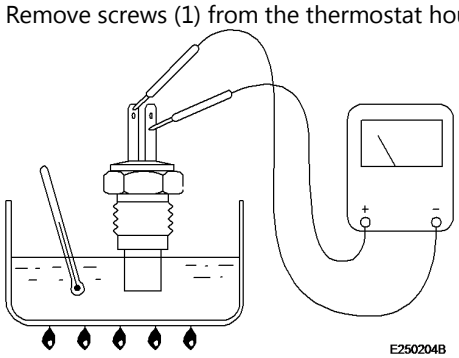

Figure 2
Testing the temperature sensor

5. Unscrew temperature sensor ([Invalid linktarget] /3) or thermal switch ([Invalid linktarget] /4).

6. Hang the temperature sensor ([Invalid linktarget] /3) into a container with anti-freeze so that the sensor is below the surface of the anti-freeze and measure the resistance while heating up the anti-freeze.
   If the resistance does not comply with specification, see table with technical data for engine on page 9, replace the temperature sensor.

   WARNING

   The anti-freeze in the container is very hot and can cause severe injury by scalding.

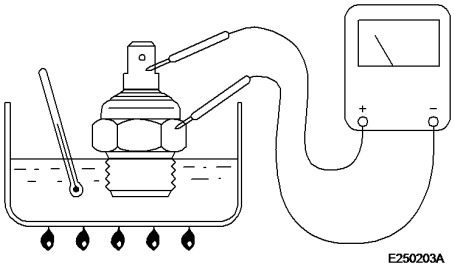

   Figure 3
   Testing the thermoswitch

7. Hang the thermal switch ([Invalid linktarget] /4) into the oil tank, so that the temperature sensor of the thermostat is below the surface of the oil and measure the resistance while heating up the oil. If the resistance does not comply with specification, see table with technical data for engine on page 9, replace the thermal switch.

   WARNING

   The oil in the container is very hot and can cause severe injury by scalding.

Assembling the thermostat housing

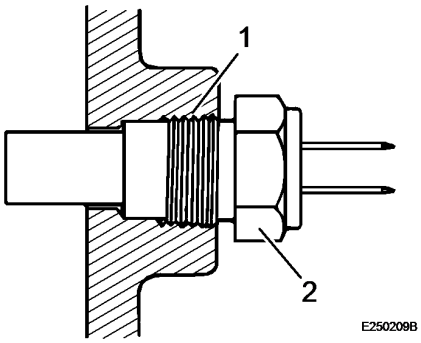

Figure 4

1. Cover the thread with sealing compound
2. Thermal switch or temperature sensor unit

Op nbr

1. Fit the thermostat housing with a new seal to the cylinder head.

2. Cover the thread of thermal switch and temperature sensor unit with sealing compound. Screw the unit in and tighten with 22.8 ± 0.4 Nm.
   NOTE!
   The thermal switch has one flag The temperature sensor unit has two flags.

3. Connect the electric cable.

4. Connect the hoses to the ports on the thermostat housing.

5. Start the engine and make sure that there are no leaks.

6. Check the coolant level. Fill up if necessary.

Removing the thermostat

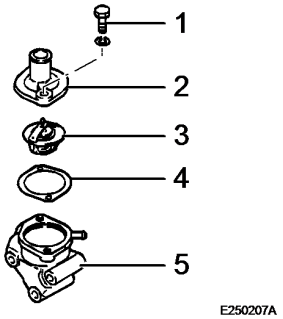

Figure 5

1. Screw
2. Cover
3. Thermostat
4. Seal
5. Thermostat housing

Op nbr 262708

1. Disconnect the hose from the cover.
   NOTE!
   Clamp the hose with clamping pliers to prevent the coolant from running out of the hoses.

2. Unscrew the screws and take off the cover with thermostat and seal.

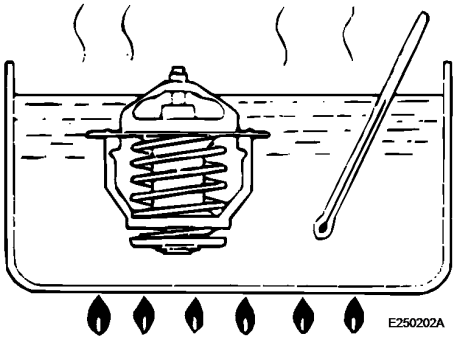

Figure 6
Testing the thermostat

3. Hang the thermostat into a water container, as shown in the illustration. The thermostat must be below the water surface and should have a sufficient clearance to the side walls of the container. Heat up the water in the container evenly and measure the temperature at which the valve starts to open (82 °C). In addition measure the temperature at which the valve stroke is 8 mm (95 °C). Replace the thermostat if it is defective.

WARNING

The water in the container is very hot and can cause severe injury by scalding.

Assembling the thermostat

Op nbr 262708

1. Insert the thermostat into the thermostat housing.
2. Attach a new gasket to the thermostat housing.
3. Assemble the cover to the thermostat housing.
4. Connect the hose to the port of the cover.
5. Start the engine and make sure that there are no leaks.
6. Check the coolant level. Fill up if necessary.

Document Title:	Function Group:	Information Type:	Date:
Tensioning the V-belt	**262**	**Service Information**	**2014/4/2 0**
Profile:			

Tensioning the V-belt

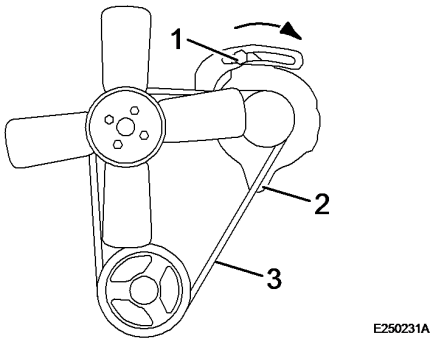

Figure 1
Tensioning the V-belt

1. Screw
2. Screw
3. V-belt (tension test 10...12 mm)

Op nbr 262101

WARNING

Check/tighten or change the V-belt only with the engine stopped.

1. Slacken screws (1 and 2).
2. Press the generator in direction of arrow, until the correct V-belt tension is reached.
3. Retighten screws (1 and 2).

Many thanks for your purchase.
Happy every day.

Document Title: **Basic objects of examination**	Function Group: **300**	Information Type: **Service Information**	Date: **2014/4/2 0**
Profile:			

Basic objects of examination

No.	Item	Set value	Remedy
1	Check the battery voltage (with engine shut down).	12 V	Replace
2	Check battery acid level.		Use only distilled water to fill up or replace battery
3	Check for abrasion, unprotected or burned cables, damaged or disconnected plug connections.		Replace
4	Check for missing cable terminals, loose cables, damaged connections and faulty ground cables.		Repair
5	Look for water that runs into the cable looms. (Check thoroughly for water leaks / damaged plug connectors and pins.) Corrosion has a tremendous effect on the function of electrical components.		Disconnect the plug connection, remove all corrosion and dry thoroughly.
6	Check the generator voltage (with engine running at a speed higher than half full speed).	14.7 ± 0.3 V	Replace
7	Abnormal noise when battery relay is operated. (Turn ignition switch ON / OFF.)		Replace
8	Check the condition of the slow-blowing and the standard fuses (burned or discontinuous function).		Replace

Document Title:	Function Group:	Information Type:	Date:
Colur codes	**300**	**Service Information**	**2014/4/2 0**
Profile:			

Colur codes

SB	= Black	**BN**	= Brown
R	= Red	**GR**	= Grey
GN	= Green	**P**	= Pink
BL	= Blue	**VO**	= Violet
Y	= Yellow	**OR**	= Orange
W	= White		

Document Title: **Designations of electrical components**	Function Group: **300**	Information Type: **Service Information**	Date: **2014/4/2 0**
Profile:			

Designations of electrical components

Designation	Designation
ALT	Generator
AUX	Accessories
BA	Battery
CA	Capacitor
CN	Plug connector
DI	Diode
ECU	Electronic central unit
FC	Fuse, cabin
FE	Fuse, electronic equipment
FH	Line fuse
FU	Fuse, standard equipment
FUSE	Fuse box, old model
HE	Heating element
IM	Instrument
LA	Lamps
LC	Control light
MA	Solenoid valve
MO	Engine
RS	Resistor/regulating resistor
BK	Switch
RE	Relay
RF	Direction indicator
SO	Electro magnets
SA	Warning buzzer
SE	Transducer

Designation	Designation	Comment	Page of wiring diagram
ALT	Generator		[Invalid linktarget] , [Invalid linktarget] , [Invalid linktarget]
AUX1	Radio		
AUX2	Loudspeaker, left		
AUX3	Loudspeaker, right		
AUX4	Hand lamp		[Invalid linktarget] ,

			[Invalid linktarget] , [Invalid linktarget] , [Invalid linktarget]
BA	Battery		[Invalid linktarget] , [Invalid linktarget] , [Invalid linktarget] , [Invalid linktarget] , [Invalid linktarget] , [Invalid linktarget] , [Invalid linktarget] , [Invalid linktarget] , [Invalid linktarget] , [Invalid linktarget] , [Invalid linktarget]
CA	Capacitor		
CN1	Cabin (ventilation/heating)		
CN2	Roll over protection structure (main ...)		
CN3	Headlights/boom		
CN4	Feed/boom		
CN5	Windscreen wiper, cabin		
CN6	Diagnostics (Puma)/optional immobilizer		
CN7	Pre-heater plugs, engine		
CN8	Main motor		
CN9	Unlocking of single or double acting attachments		
CN10	Pre-heating of intake air		
CN11	Main dashboard, right		
CN12	Main dashboard, left		
CN13	Input dashboard left or right		
CN14	Switch, offset/slewing and hydraulic/electric support		
CN15	Car radio (BV, AMP)		
CN16	Input wiring loom, construction site or road		
CN17	Main signal horn		
CN18	Flashing beacon between frame and beam or roll over protection structure		
CN19	Triggering of 6-way plug		
CN20	Triggering of 3-way plug		
CN21	Rear plate, ITALY		
CN22	Optional immobilizer		
CN23	Optional warning buzzer (NAFTA)		
CN24	Ground, starter relay (for optional immobilizer)		

CN25	Option 2 travel speeds and variable track		
CN26	Option rear headlights roll over protection structure		
Diodes			
D11	Fault, engine oil pressure		
D12	Fault, coolant		
D13	Battery charge condition		
D14	Interference suppression, engine fuse		
Electronic central unit			
ECU1	Electronic multi-function switch (PUMA)		
ECU2	Basic control unit		
ECU3	Basic control unit and options		
ECU4	Control unit for engine control		
ECU5	Numerical keyboard for immobilizer		
ECU6	Control unit for digital immobilizer		
Fuses (cabin)			
FC1	Ventilation/heating of cabin		
FC2	Memory, car radio		
FC3	Supply, car radio		
FC4	Ceiling light		
FC5	Windscreen wiper and washer		
Fuses (electronic equipment)			
FE1	Puma		
FE2	Puma		
FE3	Puma		
FE4	Lighting		
FE5	Cabin, optional travel alarm system		
FE6	Warning buzzer, service plug, car radio memory, optional flashing beacon		
Main fuses			
FH1	Main fuse (MASTER)		[Invalid linktarget] , [Invalid linktarget] , [Invalid linktarget] , [Invalid linktarget] , [Invalid linktarget] , [Invalid linktarget] , [Invalid linktarget] , [Invalid linktarget] , [Invalid linktarget] ,

			[Invalid linktarget]
FH2	Pre-heating plugs		[Invalid linktarget] , [Invalid linktarget] , [Invalid linktarget] , [Invalid linktarget] , [Invalid linktarget] , [Invalid linktarget] , [Invalid linktarget] , [Invalid linktarget] , [Invalid linktarget] , [Invalid linktarget]
FH3	Pre-heating of intake air		
Fuses (standard equipment)			
FU1	Engine, dashboard, optional immobilizer		[Invalid linktarget] , [Invalid linktarget] , [Invalid linktarget] , [Invalid linktarget]
FU2	Slewing/offset, hydraulic support, safe starting		[Invalid linktarget] , [Invalid linktarget]
FU3	2-speed, optional unlocking of attachments, variable track, accessories		[Invalid linktarget] , [Invalid linktarget] , [Invalid linktarget]
FU4	Lighting		[Invalid linktarget] , [Invalid linktarget]
FU5	Cabin and optional travel alarm system		[Invalid linktarget] , [Invalid linktarget]
FU6	Main signal horn, service plug, car radio memory, optional flashing beacon, immobilizer		[Invalid linktarget] , [Invalid linktarget] , [Invalid linktarget] , [Invalid linktarget]
Heating elements			
HE1	Pre-heating plugs		[Invalid linktarget] , [Invalid linktarget] , [Invalid linktarget]

HE2	Cigarette lighter		[Invalid linktarget]
HE3	Pre-heating of intake air		[Invalid linktarget]
Instruments			
IM1	Control switch		[Invalid linktarget] , [Invalid linktarget] , [Invalid linktarget] , [Invalid linktarget]
IM2	Hour meter		
IM3	Fuel level gauge		
Lamps (illumination)			
LA1	Headlights/boom		[Invalid linktarget] , [Invalid linktarget]
LA2	Headlight/cabin front right		
LA3	Headlight/cabin weather roof front left		
LA4	Headlights/roll over protection structure rear		[Invalid linktarget] , [Invalid linktarget]
LA5	Flashing beacon		[Invalid linktarget] , [Invalid linktarget] , [Invalid linktarget]
LA6	Cabin ceiling light		
LA7	Ceiling light motor		
LA8	Headlight, front (version for construction site ED750)		
LA9	Headlight StVO, left hand side		
LA10	Headlight StVO, right hand side		
LA11	Rear plate, left hand side (ITALY)		
LA12	Rear plate, right hand side (ITALY)		
LA13	Backup light		
LA14	Direction indicator, left		
LA15	Direction indicator, right		
LA16	Parking light, left		
LA17	Parking light, right		
LA18	Brake light, left		
LA19	Brake light, right		
Control lights			
LC1	Headlights/boom		[Invalid linktarget] , [Invalid linktarget]
LC2	Headlights/cabin or weather roof		
LC3	Flashing beacon		[Invalid linktarget] , [Invalid linktarget] , [Invalid linktarget]
LC4	2-speeds		[Invalid

			linktarget] , [Invalid linktarget] , [Invalid linktarget]
LC5	Travel safety		
LC6	Pre-heating of engine		
LC7	Engine oil pressure		
LC8	Coolant temperature, engine		
LC9	Battery charge condition		
LC10	Contamination of hydraulic oil filter		
LC11	Contamination of air filter		
LC12	Serviceleuchte		
LC13	Cabin heating		
LC14	Unlocking of attachment, right hand side		
LC15	Unlocking of attachment, left hand side		
LC16	Working headlights, rear		
LC17	Slewing/offsetting		
LC18	Variable track		
LC19	Hour meter		
LC20	Headlights		
Solenoid valves			
MA1	Support		
MA2	2-speeds		[Invalid linktarget] , [Invalid linktarget] , [Invalid linktarget]
MA3	Slewing/offsetting		[Invalid linktarget] , [Invalid linktarget]
MA4	Variable track		[Invalid linktarget] , [Invalid linktarget] , [Invalid linktarget]
MA5	Unlocking of attachment		
MA6	Accessory, right hand side		
MA7	Accessory, left hand side		
Engines			
MO1	Starter		[Invalid linktarget] , [Invalid linktarget] , [Invalid linktarget]
MO2	Fuel pump		[Invalid linktarget] , [Invalid linktarget]
MO3	Ventilator/cabin heater		
MO4	Windscreen washing system, front		
MO5	Windscreen wiper, front		

Relay			
RE1	Starter (40)		
RE2	Pre-heating of engine		[Invalid linktarget] , [Invalid linktarget] , [Invalid linktarget]
RE3	Lighting		
RE4	Engine safety		
RE5	Slewing/offsetting		[Invalid linktarget] , [Invalid linktarget]
RE6	Safety with engine running		
RE7	Pre-heating delay		[Invalid linktarget] , [Invalid linktarget] , [Invalid linktarget]
RE8	Unlocking of attachment, double acting		
RE9	Steering switch-over		
RE10	Pre-heating of intake air		
RE11	Intake air pre-heating delay		
RE12	Digital immobilizer		
RF1	Direction indicator		
Resistors			
RS1			
Warning buzzer			
SA1	Main signal		[Invalid linktarget] , [Invalid linktarget] , [Invalid linktarget]
SA2	Travel operation		[Invalid linktarget] , [Invalid linktarget]
SA3	Unlocking of attachment		
SA4	Fault, engine oil pressure		
Transducer			
SE1	Fuel level		[Invalid linktarget] , [Invalid linktarget]
SE2	Engine oil pressure		[Invalid linktarget] , [Invalid linktarget] , [Invalid linktarget]
SE3	Thermal switch, coolant		[Invalid linktarget] , [Invalid linktarget] , [Invalid linktarget]

SE4	Contamination of hydraulic oil filter		
SE5	Contamination of air filter		[Invalid linktarget] , [Invalid linktarget] , [Invalid linktarget]
SE6	Transport, valve/boom		
SE7	Steering switch-over		
SE8	Hydraulic oil temperature		
SE9	Coolant temperature (sensor)		
Electro magnets			
SO1	Engine shut down		[Invalid linktarget] , [Invalid linktarget]
Switch			
SW1	Ignition switch		[Invalid linktarget] , [Invalid linktarget] , [Invalid linktarget] , [Invalid linktarget] , [Invalid linktarget] , [Invalid linktarget] , [Invalid linktarget] , [Invalid linktarget] , [Invalid linktarget]
SW2	Headlights/boom		
SW3	Headlight/cabin weather roof		
SW4	Flashing beacon		[Invalid linktarget] , [Invalid linktarget] , [Invalid linktarget]
SW5	2-speeds		
SW6	2-speeds, secondary		
SW7	Buzzer		[Invalid linktarget] , [Invalid linktarget] , [Invalid linktarget]
SW8	Slewing/offsetting		[Invalid linktarget] , [Invalid linktarget]
SW9	Safety of working hydraulics		
SW10	Safety of secondary hydraulics		
SW11	Variable track		
SW12	Ventilation/cabin heating		

SW13	Windscreen wiper and washer		
SW14	Unlocking of attachment, right hand side		
SW15	Unlocking of attachment, left hand side		
SW16	Transport lock/boom		
SW17	Travel lever, right		
SW18	Travel lever, left		
SW19	Warning buzzer, travel system		
SW20	Equipment accessories/control lever, right		
SW21	Equipment accessories/control lever, left		
SW22	Oscillation lock		
SW23	Hazard light system		
SW24	Working headlights, rear		
SW25	Battery disconnecting switch		[Invalid linktarget] , [Invalid linktarget] , [Invalid linktarget] , [Invalid linktarget] , [Invalid linktarget] , [Invalid linktarget] , [Invalid linktarget] , [Invalid linktarget] , [Invalid linktarget]
SW26	Headlights, front		
SW27	Starting safety for engine, clutch pedal		
SW28	Multi-function switch		
SW29	Foot brake contact switch		
SW30	Backup light contact switch		
SW31	Hand brake contact switch		
SW32	Boom-mounted headlights and rear headlights on roll over protection structure (double function)		[Invalid linktarget] , [Invalid linktarget]
SW33	2 travel speeds and variable track (double function)		[Invalid linktarget] , [Invalid linktarget] , [Invalid linktarget]

Document Title: **Diagnostics**	Function Group: **300**	Information Type: **Service Information**	Date: **2014/4/2 0**
Profile:			

Diagnostics

Trouble shooting on currently used, complex electronic/electrical systems, which is based on the replacement of components according to the principle **Trial an Error**and on an unreasonable maintenance practice like the opening of wiring looms or the piercing/removal of cable insulations for test probes and multimeter clips is a **Hit or Miss method**, which is time consuming and expensive with respect to parts, labour and downtime.

Normally this results in an **temporary repair**, the rectification of a symptom, but does not eliminate the nature of the problem.

- Examine the system: Read the service manual → check the main electrical wiring diagram → become acquainted with the function of the components.
- Analyse the complaint: Ask the driver → When did the problem first occur → What is the malfunction → Were parts repaired or replaced lately → If yes, why?
- Examine the machine: Check battery, fuses, connecting pins of plug connectors, wiring looms, switches etc. → Check also other systems. E.g. no fuel
- Start the machine: Listen → Watch → Try to sense the effect of the fault symptom.
- Try to narrow down the cause of the fault: Look for the most obvious reasons first → Avoid unnecessary replacement of parts → Use appropriate tools and the correct diagrams to find the main cause.
- Objective: To isolate and identify a fault(s) on one (several) component(s).

Malfunctions in electrical control circuits, high resistance in the electrical circuit

1. A high resistance in the electrical circuit can result in weak lighting and slow or non-functioning components.
2. Fault:

    - Loose, corroded, soiled or oily connections.
    - Poor connection to ground
    - Wrong cable cross section
    - Broken flexible leads in a cable

3. To localize the fault:

    - Measure the voltage in the power circuit at various points in order to localize the section with a voltage drop, e.g. via the plug connection in a wiring loom.

Malfunctions of electrical control circuits, interrupted electrical circuits

1. An interrupted electrical circuit has the effect that no component in this circuit will work.
2. Fault:

    - Blown-out fuse, disconnected cable, plug connection without connection, loose connecting pin on a component or ground cable without connection.

3. To localize the fault:

    - Check visually for blown fuses, loose connections or cables.
    - Perform voltage tests in this electric circuit to check the continuity.
    - If there is no continuity measure along the electrical circuit until continuity is found.

Malfunction in the electrical system, electrical circuit short to ground

1. A short to ground in an electrical circuit will cause tripping of the fuse and blow out the spare fuse after

replacement.

2. Fault:

    - A conducting cable with the insulation worn off down to the unprotected conductor in contact with the chassis or a squashed cable on which the insulation has been cut open.

3. To localize the fault:

    - Check the wiring looms visually for worn or squashed sections. Pay special attention to locations where the wiring loom passes through clamps, bushings or close to hot components, such as exhaust or radiator.
    - Remove the fuse and disconnect the plug connections of the wiring loom at several places and check each location for ground connection.

Malfunction of the electrical system, short circuits

1. A short circuit in an electric circuit has the effect that components in separate electrical circuits will be actuated when switching only one of the switches in an electrical circuit.
   NOTE!
   Components can also cause a short circuit to ground, but in such a case the fuse normally blows.

2. Fault:

    - Two wiring looms rubbing against each other until the insulation is chafed through, so that the electrical conductors have contact between each other.

3. To localize the fault:

    - Disconnect the cable to the switch for the component that should not be active.
    - Disconnect the plug connections in the wiring loom of the electrical circuit until the component is switched off. The short circuit should be located between the two points at which the electrical circuit was interrupted.

Document Title:	Function Group:	Information Type:	Date:
Electric system, trouble shooting	**300**	**Service Information**	**2014/4/2 0**
Profile:			

Electric system, trouble shooting

Check before trouble shooting

- Malfunctions in the electric system can be identified and isolated by strictly following these worked out trouble shooting procedures. Collect all facts → Analyze the problem → Set the symptoms in relation to other systems → Examine current repairs Use circuit diagrams → Look for the most obvious faults first → Determine and rectify the main cause.

Document Title: **Electrical system, description**	Function Group: **300**	Information Type: **Service Information**	Date: **2014/4/2 0**
Profile:			

Electrical system, description

The electrical system consists of three major circuits: the voltage circuit, the monitoring circuit and the control circuit.

- The functions of the main power circuit include: Starting of the engine, charging of the battery and lighting functions. The main power supply circuit works with 12 Volt.
- The monitoring circuit provides information on the operating state of the machine gathered by numerous sensors and switches.
- For easier trouble shooting all connections on wiring looms are numbered.
- Slow-blowing fuses protect the electrical components in the main power supply circuit.

CAUTION

Do not disconnect electrical plug connections while the engine is running. This may cause damage to engine, sensors or other components.

Document Title:	Function Group:	Information Type:	Date:
Identification of plug connectors/lines	**300**	**Service Information**	**2014/4/2 0**
Profile:			

Identification of plug connectors/lines

The different parts in the electrical system are normally joined by multi-pole plug and socket connectors, enabling easy replacement of components. Lines and plug connectors are marked as follows.

Document Title:	Function Group:	Information Type:	Date:
Identification of lines	**300**	**Service Information**	**2014/4/2 0**
Profile:			

Identification of lines

All lines are identified by colour, in compliance with the wiring diagram.

Document Title:	Function Group:	Information Type:	Date:
Identification of plug connectors/lines	**300**	**Service Information**	**2014/4/2 0**
Profile:			

Identification of plug connectors/lines

The explanations on page 5 are valid.

In the wiring diagram lines are identified by colours:

Document Title:	Function Group:	Information Type:	Date:
Line connections in the wiring loom	**300**	**Service Information**	**2014/4/2 0**
Profile:			

Line connections in the wiring loom

Each pin of a plug and socket connector has a position number ([Invalid linktarget] /2) assigned. Beginning and end of a line have an**identical** position number.

In order to find the end of a cable, you must search for the position number assigned to the beginning of the cable in the wiring loom.

Each line is identified by a colour code ([Invalid linktarget] /1).

Each line end is designated with the pin-no. of the connected plug ([Invalid linktarget] /3).

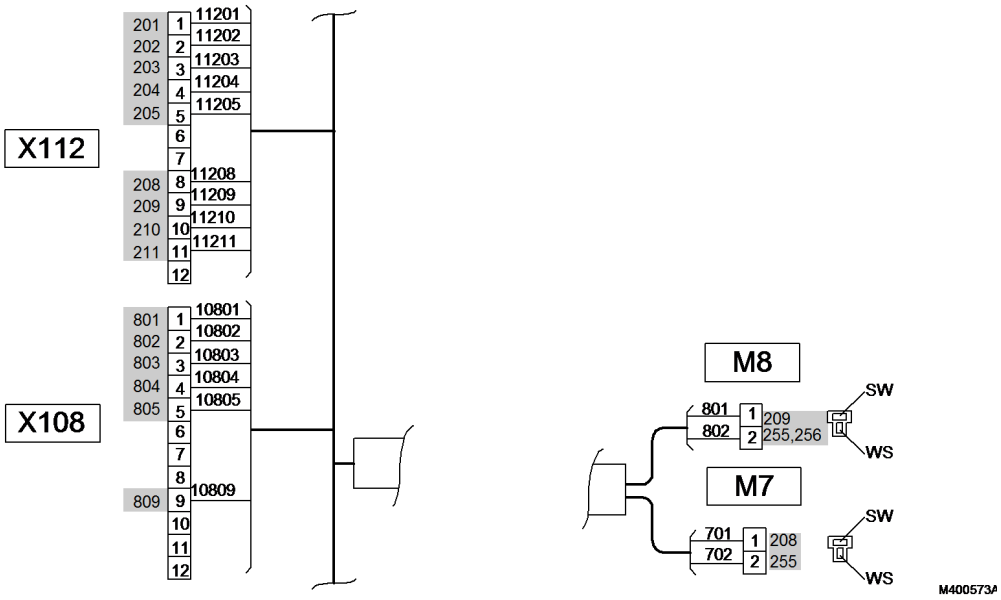

Figure 1

The cable is in this case connected with the plug connection **CN7** and **CN8**.

Document Title:	Function Group:	Information Type:	Date:
Marking of plug connectors	**300**	**Service Information**	**2014/4/2 0**
Profile:			

Marking of plug connectors

In the wiring diagram all plug connectors are marked with their full designation.

Plug connectors between wiring looms and plug connectors on equipment have different designations:

Plug connectors for wiring looms
The designation is **CN...**, followed by a number, e.g. **CN19**.

Plug connectors on equipment
The designation is **X...**, followed by the designation of the connected equipment, e.g. **XMA3**.

XMA3	Connecting plug X on solenoid valve for slewing/offsetting **(MA3)**

Document Title:	Function Group:	Information Type:	Date:
Minus connection	**300**	**Service Information**	**2014/4/2 0**
Profile:			

Minus connection

B-	Battery (-)

Document Title:	Function Group:	Information Type:	Date:
Overview digital immobilizer (option)	**300**	**Service Information**	**2014/4/2 0**
Profile:			

Overview digital immobilizer (option)

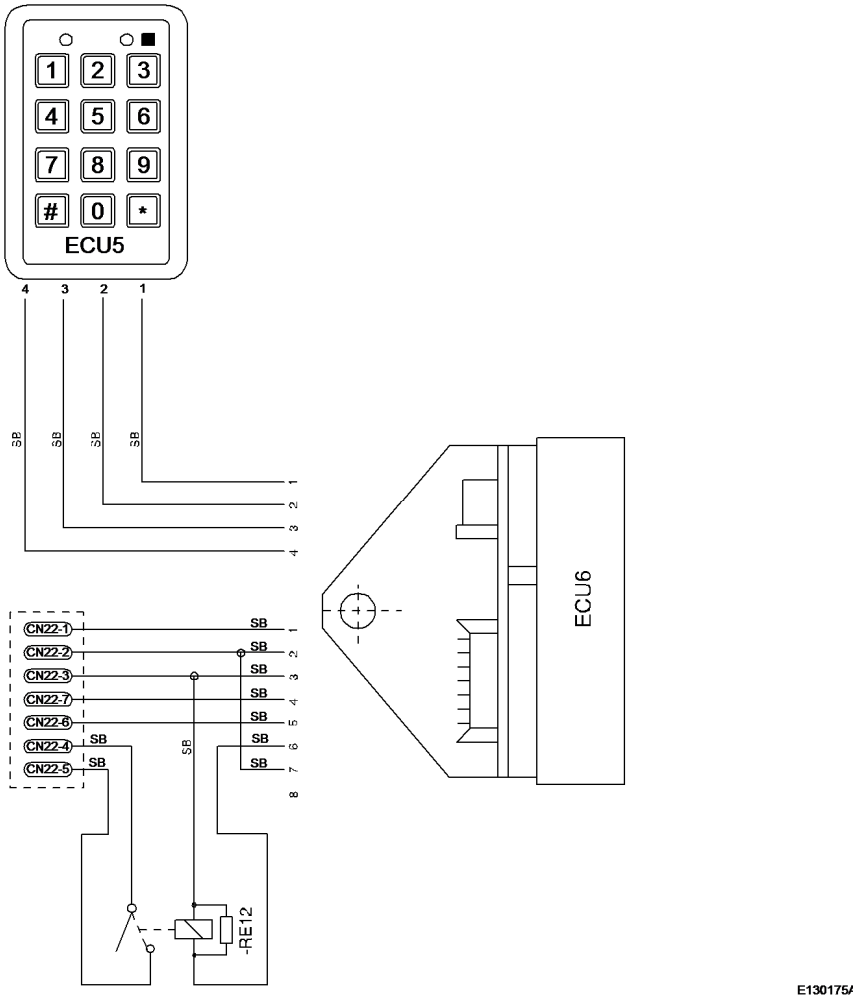

Figure 1

- ECU5	Numerical keyboard for immobilizer
- ECU6	Control unit for digital immobilizer
- RE12	Relay for digital immobilizer
- CN22	Plug connection for immobilizer option

Travel operation

see [Invalid linktarget]

-MA22-speed solenoid valve

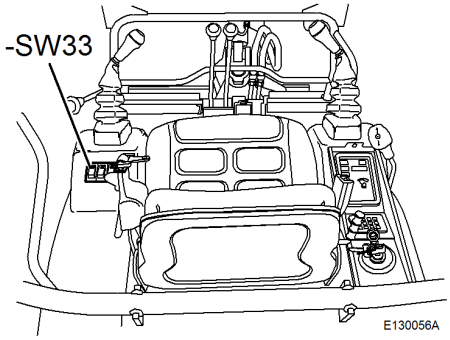

Figure 2

- SW33 Switch for fast speed and track width adjustment (only for version XTV)

Changing the speed:
Two position switch.
- Actuating the selector switch **- SW33** changes the travel speed (fast speed).

The solenoid valve **- MA2** is located in the driver"s cab under the floor plate on the left hand side.

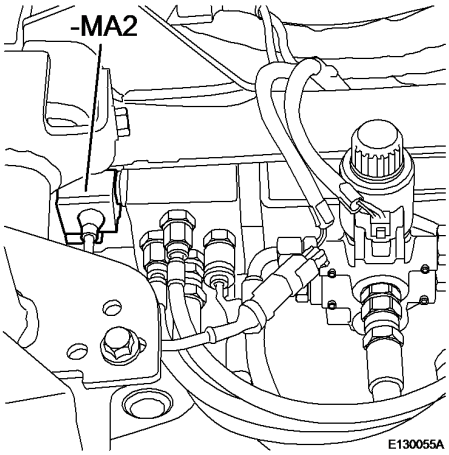

Figure 3

- MA22-speed solenoid valve

Fuses

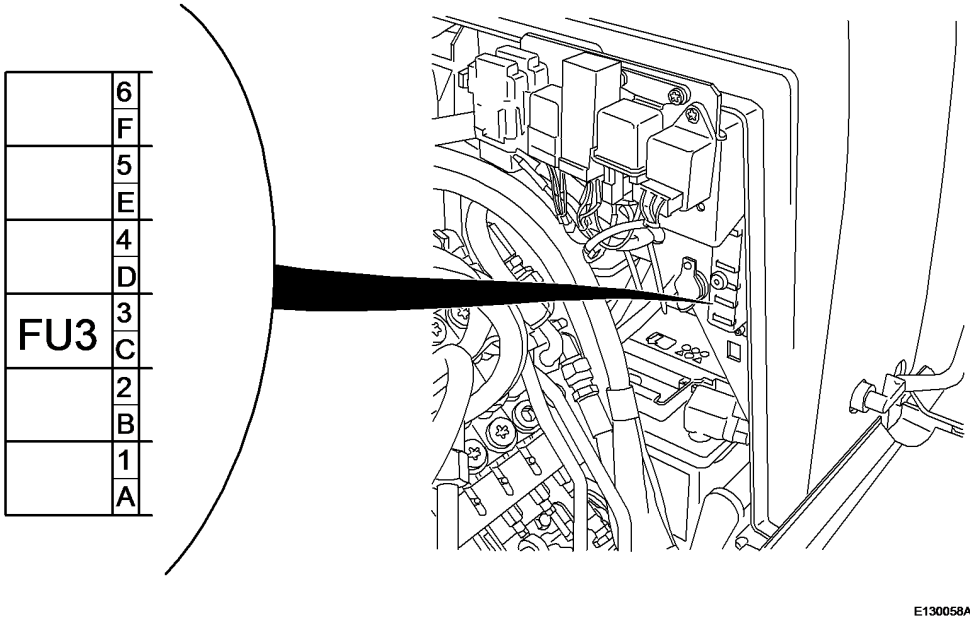

Figure 4

- **FU3/10 A** 2-speed, optional unlocking of attachments, variable track, accessories

Document Title:	Function Group:	Information Type:	Date:
Plus connection	**300**	**Service Information**	**2014/4/2 0**
Profile:			

Plus connection

B+	Battery (+)

VOLVO
Construction Equipment

Service Information

Document Title: **Precautions when handling plug connectors**	Function Group: **300**	Information Type: **Service Information**	Date: **2014/4/2 0**
Profile:			

Precautions when handling plug connectors

1. Our plug connectors are fitted with an interlock. Always release the lock before disconnecting a plug connector.

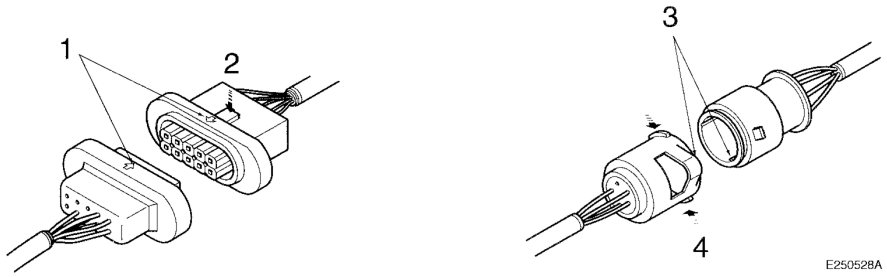

Figure 1
Plug connector, precaution 1

   1. When connecting align the arrows at the same level and press the parts together. Make sure that the rubber cap seals the connection properly.
   2. To disconnect press this part and pull the plug connector out.
   3. For connection align the guides of the plug connectors and press them together.
   4. To disconnect press both ends and pull the plug connection apart.

2. Do not pull on the cables to disconnect the plug connector.

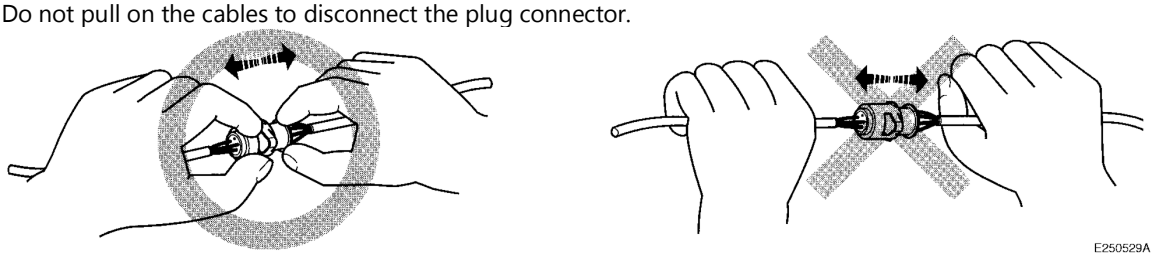

Figure 2
Plug connector, precaution 2

3. If the plug connection is hard to disconnect to not attempt to pull it out. (If it is difficult to access remove the clamp and take the wiring loom out.)

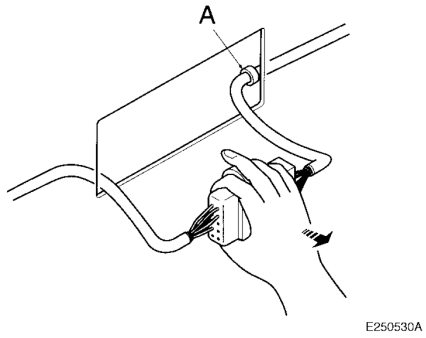

Figure 3
Plug connector, precaution 3

   A. Must be removed.

Document Title: **Wiring diagrams**	Function Group: **300**	Information Type: **Service Information**	Date: **2014/4/2 0**
Profile:			

Wiring diagrams

Complete wiring diagram (part 1)

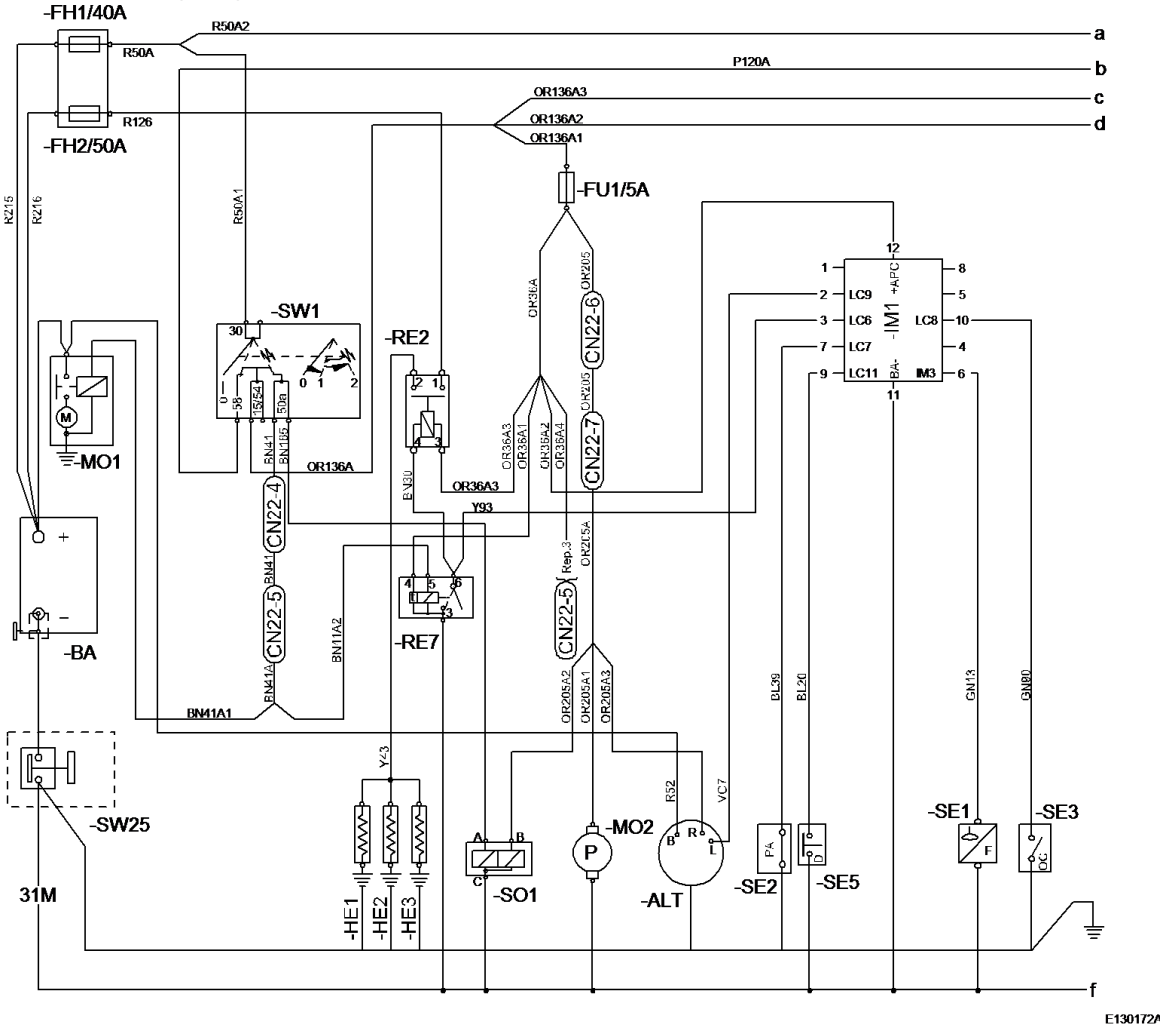

Figure 1

Shut-down solenoid **S01:**

Connection **A -**	Attraction
Connection **B-**	Holding
Connection **C -**	Ground (GND)
- CN22	Plug connection for immobilizer option

Complete wiring diagram (part 2)

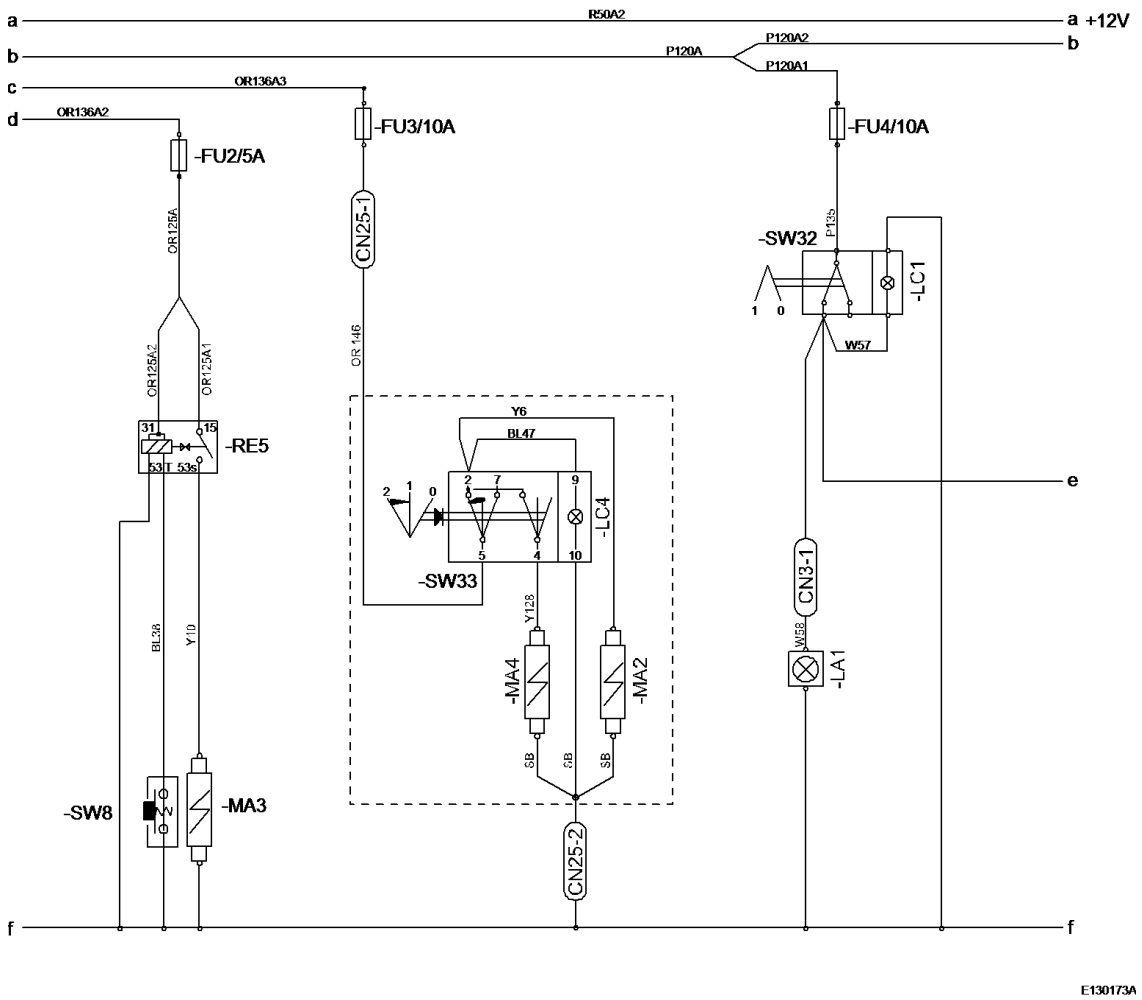

Figure 2

- CN3	Plug connector for headlights/boom
- CN2 5	Plug connection for option 2 travel speeds and variable track

Complete wiring diagram (part 3)

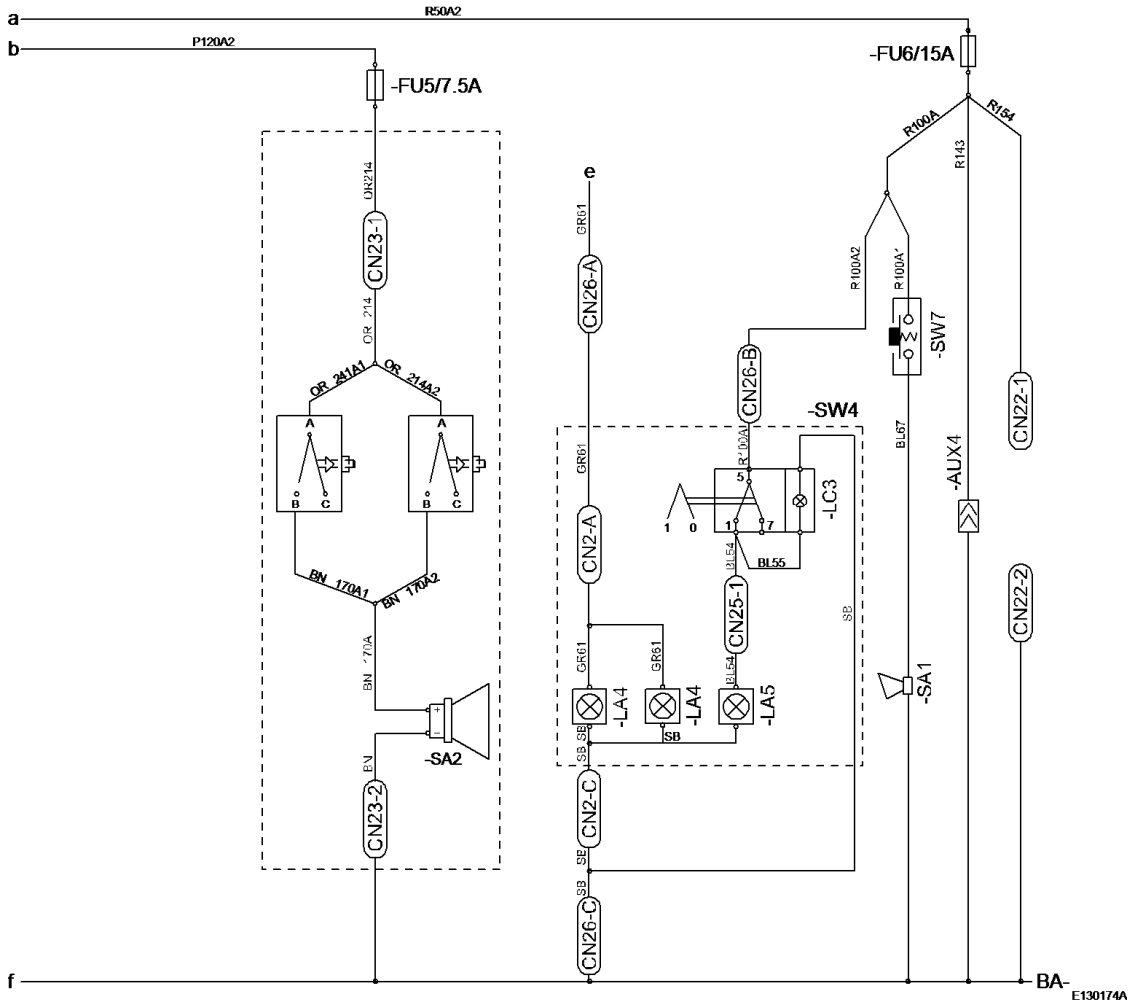

Figure 3

- **CN2** Plug connection for roll over protection structure
- **CN2**2 Plug connection for immobilizer option
- **CN23** Plug connection for optional warning buzzer (NAFTA)
- **CN26** Plug connection for optional boom-mounted headlights, rear headlights on roll over protection structure

VOLVO

Construction Equipment

Service Information

Document Title:	Function Group:	Information Type:	Date:
Wiring diagram solenoid valve for ariable track (only XTV design)	**300**	**Service Information**	**2014/4/2 0**
Profile:			

Wiring diagram solenoid valve for ariable track (only XTV design)

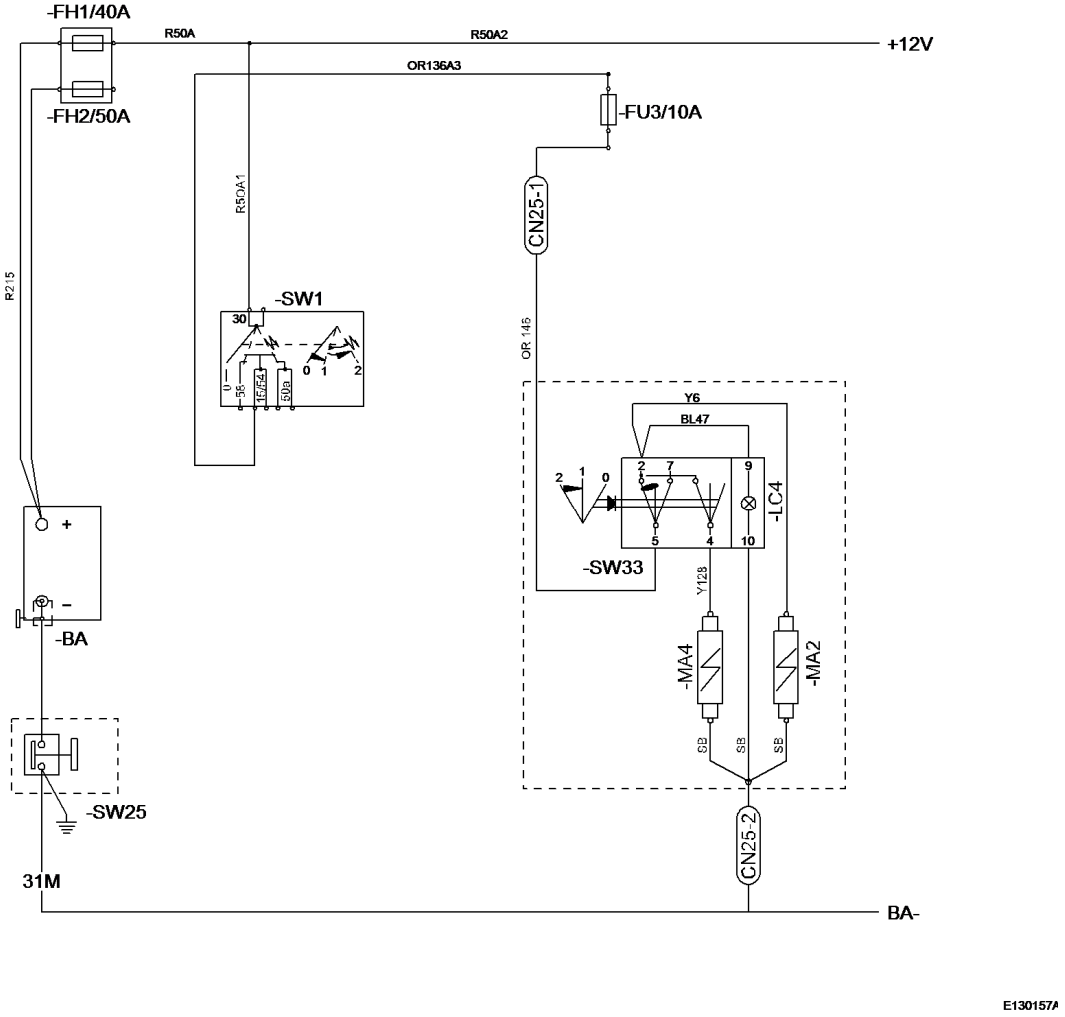

Figure 1

- MA4 Solenoid valve, variable track

VOLVO
Construction Equipment

Service Information

Document Title:	Function Group:	Information Type:	Date:
Wiring diagram travel system solenoid valve 2 travel speeds	**300**	**Service Information**	**2014/4/2 0**
Profile:			

Wiring diagram travel system solenoid valve 2 travel speeds

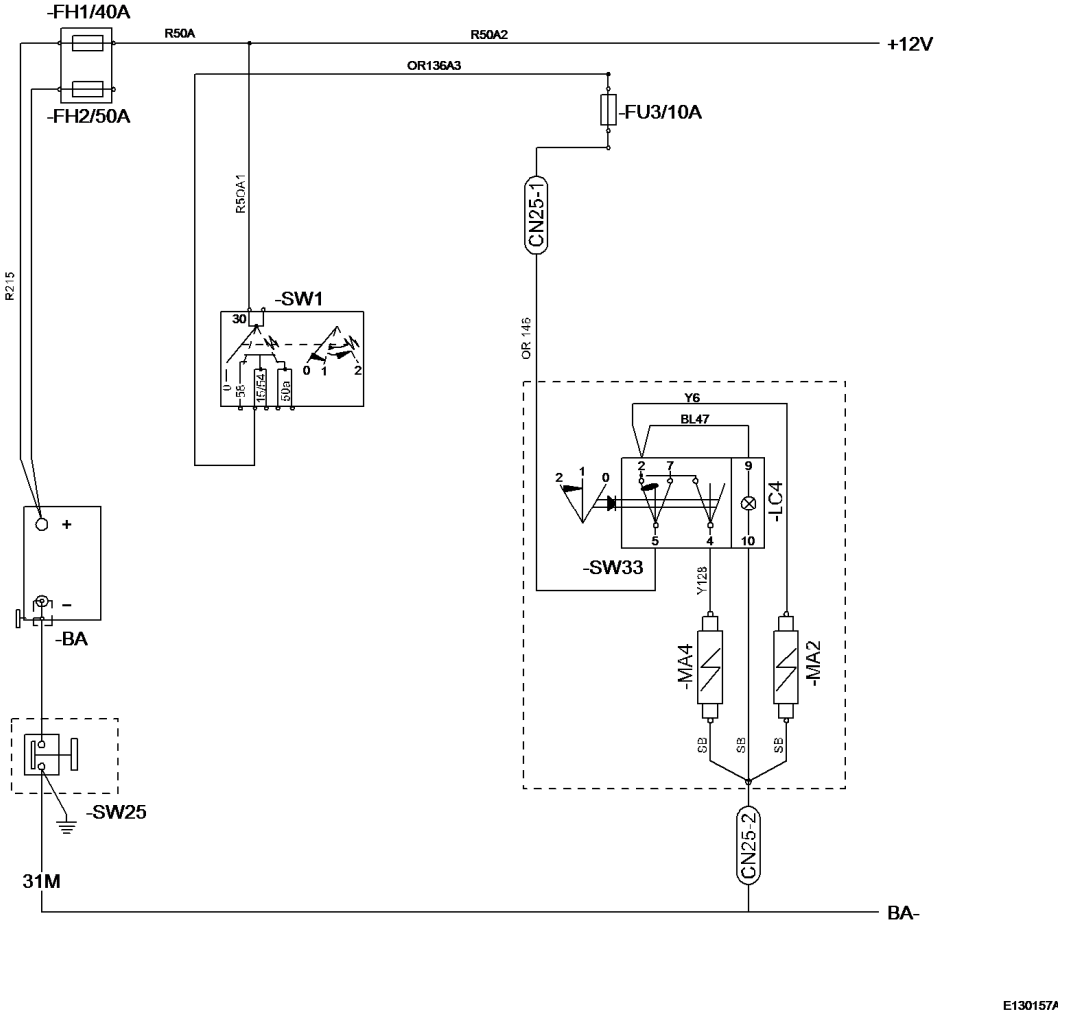

Figure 1

- MA2 2-speeds solenoid valve

Slewing/offsetting

see [Invalid linktarget]

- **MA3**Solenoid valve, slewing/offsetting

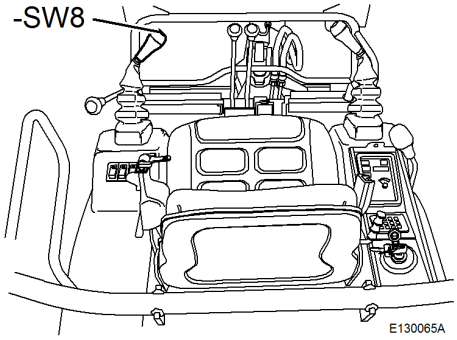

Figure 2

- SW8 Switch for slewing/offsetting

- Actuation of the switch **- SW8** changes the triggering of the control lever:
  Excavating equipment offset or slewing movement

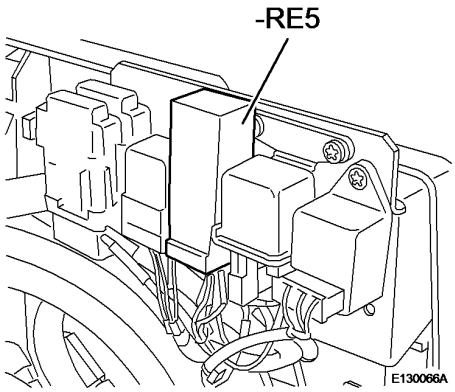

Figure 3

- RE5 Relay for slewing/offsetting

The solenoid valve **- MA3** is located in the driver"s cab under the floor plate at the front right hand side.

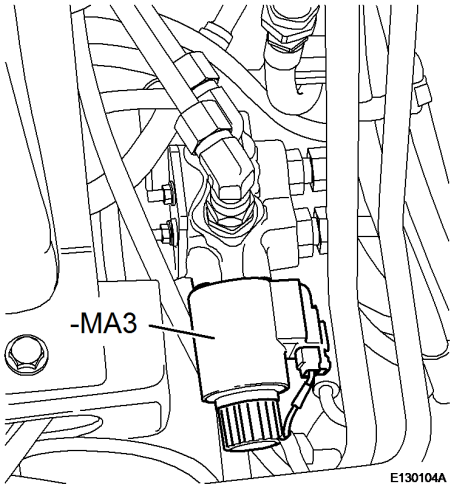

Figure 4

- **MA3**Solenoid valve, slewing/offsetting

Fuses

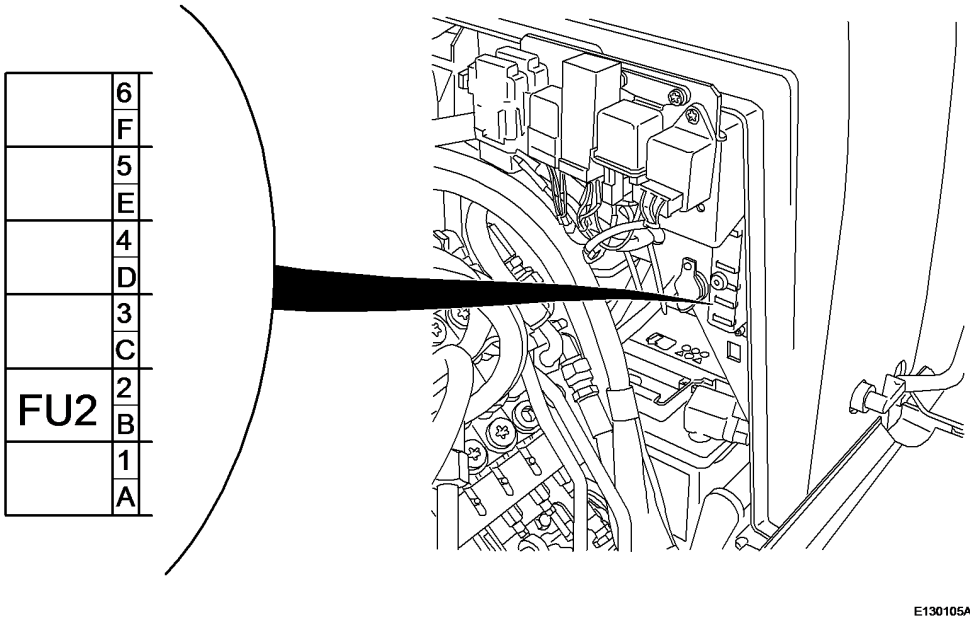

Figure 5

- **FU3/5A**	Lock	Slewing/offset, hydraulic support, safe starting

Document Title:	Function Group:	Information Type:	Date:
Wiring diagram - legend	**300**	**Service Information**	**2014/4/2 0**
Profile:			

Wiring diagram - legend

Optional equipment

NOTE!

Current paths for optional equipment are drawn in form of **dashed** lines **(------)**in the wiring diagram.

Document Title:	Function Group:	Information Type:	Date:
Wiring diagram, slewing/offsetting	**300**	**Service Information**	**2014/4/2 0**
Profile:			

Wiring diagram, slewing/offsetting

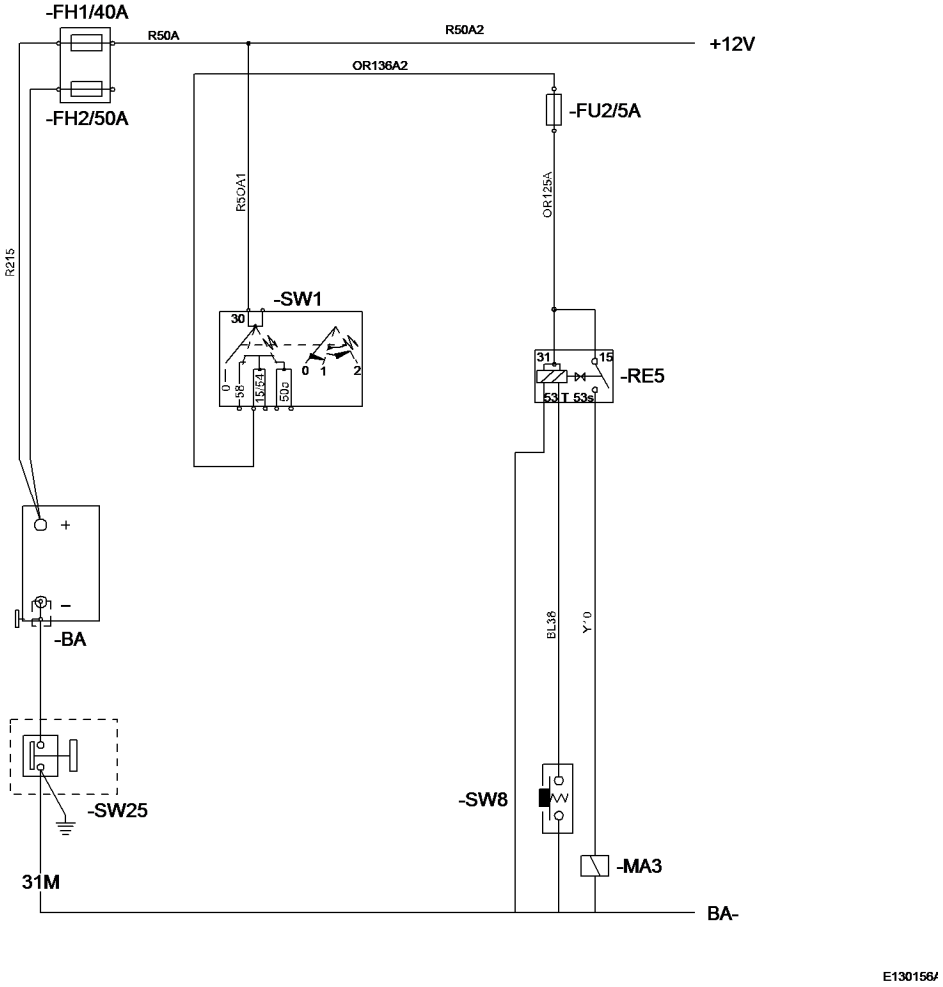

Figure 1

- MA3 Solenoid valve, slewing/offsetting

Variable track (only XTV design)

see [Invalid linktarget]

-MA4 Solenoid valve, variable track width

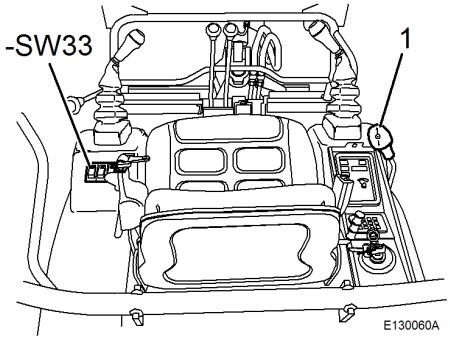

Figure 2

1Control lever, variable track

- SW33 Switch for fast speed and track width adjustment (only for version XTV)

Two position switch.

- Press and hold selector switch **- SW33**, operate lever 1 (forw./back).
  Extension or reduction of track width.

The solenoid valve **- MA4** is located in the driver"s cab under the floor plate on the left hand side.

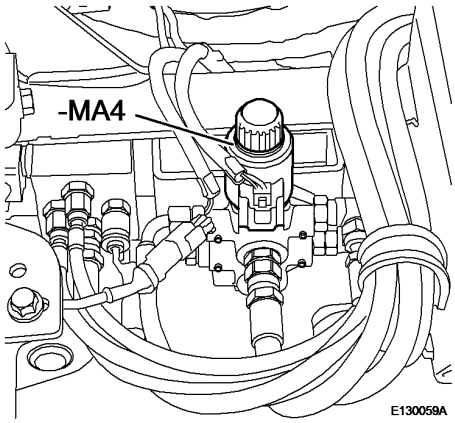

Figure 3

- MA4 Solenoid valve, variable track width

Fuses

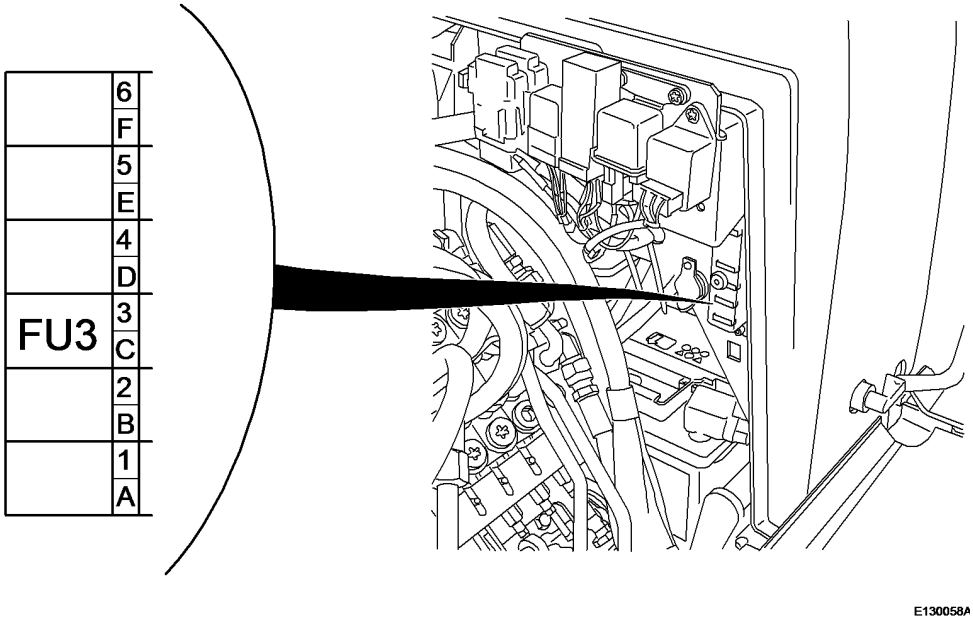

Figure 4

- **FU3/10 A** 2-speed, optional unlocking of attachments, variable track, accessories

Document Title:	Function Group:	Information Type:	Date:
Battery, description	**310**	**Service Information**	**2014/4/2 0**
Profile:			

Battery, description

- The battery delivers a voltage of 12 Volt.
- The battery is used to start the engine, to supply the electrical components with electric current and to store the current supplied by the generator.

WARNING

Battery acid can cause cauterization of the skin and blindness. If your skn or eyes have come in contact with battery acid rinse off immediately with lots of clear water and consult a physician.

CAUTION

If a tool comes in contact with the positive terminal of the cable and, at the same time, with the chassis, there is a risk of formation of sparks.

The pole clamps must be properly tightened, as otherwise there is a risk that the connections may burn or corrode because of the parts caused by insufficient contact.

When removing the battery you should first disconnect the black sheathed cable from the ground connection (negative (-) pole).

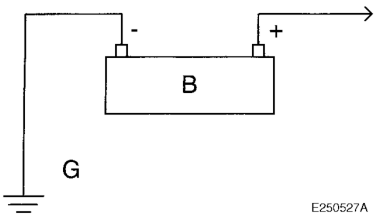

Figure 1
Battery

B Battery

G Ground

NOTE!
Under very cold weather conditions the battery power may drop. In this case warm up the battery and start the engine.

Document Title:	Function Group:	Information Type:	Date:
Battery, specification	**310**	**Service Information**	**2014/4/2 0**
Profile:			

Battery, specification

Item		**Unit**	**Specification**
Battery	Type	–	MF
	Power	V-Ah	12-44
	Quantity	EA	1

Document Title:	Function Group:	Information Type:	Date:
Battery, generator, dashboard	**320**	**Service Information**	**2014/4/2 0**
Profile:			

Battery, generator, dashboard

The battery is located under the lower left hand side casing.

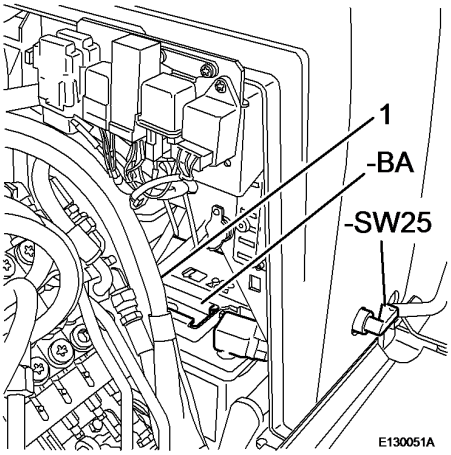

Figure 1

- **BA** Battery

- **1**Battery disconnect terminal

- **SW25** battery disconnection

The dual covers of the battery are fitted with acid mist separators.

The battery is designed as a maintenance free unit.

WARNING

Observe the safety regulations, see chapter "Safety".

The battery disconnecting terminal ([Invalid linktarget] /1) is located on the minus pole.

In case of longer periods of standstill the battery disconnecting terminal must be disconnected from the battery.

WARNING

The main battery switch - SW25 ([Invalid linktarget]) must not be switched off while the engine is running.

The generator must be connected with the battery while the engine is running.

Non-compliance with the prerequisites mentioned above may cause damage to the generator.

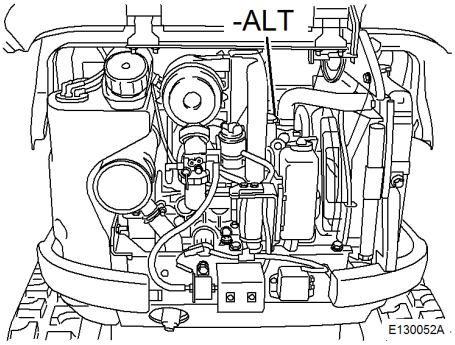

Figure 2

- ALT Generator

Generator

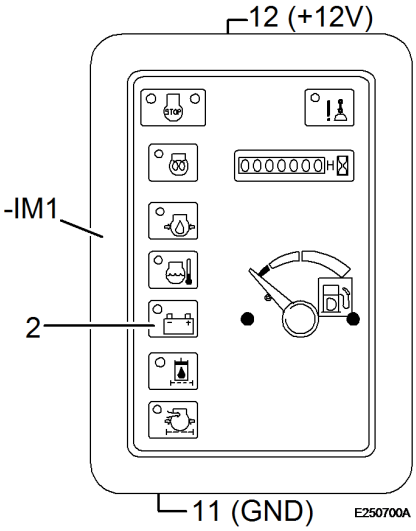

Figure 3

2 battery charge indicator

Dashboard (- IM1)

Fuses

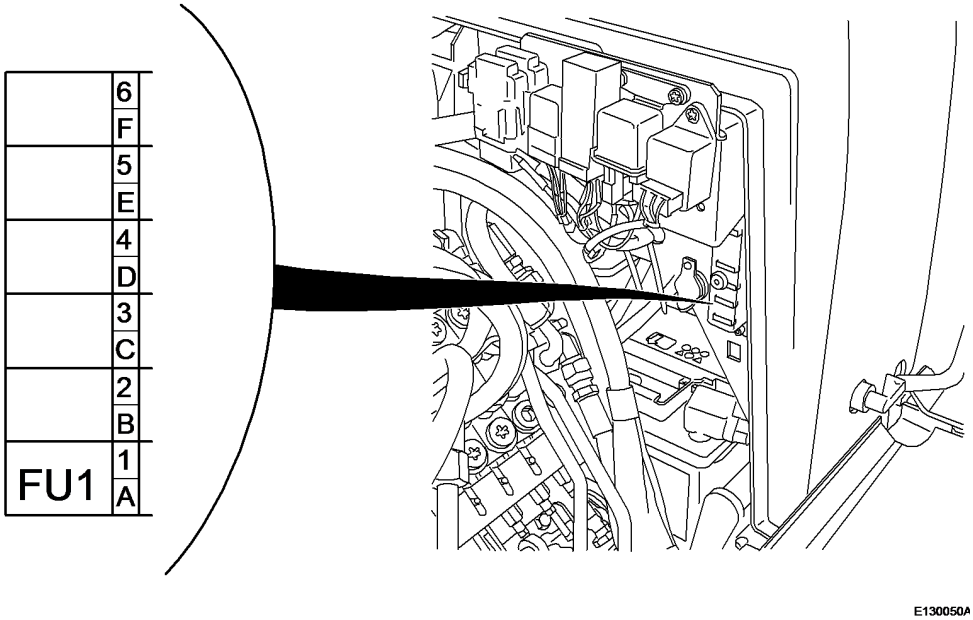

Figure 4

- **FU1/5 A** Engine, dashboard, optional immobilizer

Document Title: **Tests before disassembly**	Function Group: **320**	Information Type: **Service Information**	Date: **2014/4/2 0**
Profile:			

Tests before disassembly

Prerequisite for a correct diagnose of the load circuit is a thorough examination while the generator is still mounted to the engine, in order to be able to decide whether the generator needs to be removed for more thorough testing. The following table, which describes two faults and alsways four possible reasons, helps to detect the cause of the fault:

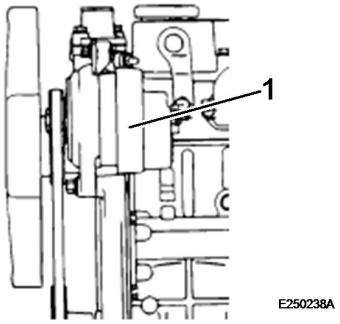

Figure 1
Generator on engine

Load on generator too high	Voltage regulator set too high
	Ground line defective
	Wiring faulty
	Series resistor or winding in open electrical circuit
Generator does not deliver any load	Generator drive belt loose
	Voltage regulator set too low
	Low generator power
	Brushes worn off

Precautions for disassembly

Essential precautions for disassembly are listed below:

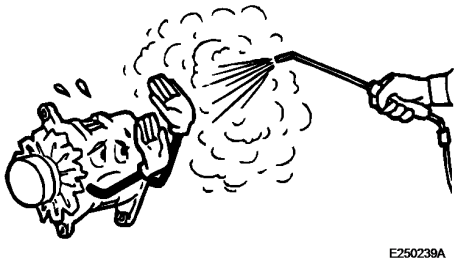

Figure 2

1. When connecting the battery make sure that the ground line is connected.
2. Do not use a mega-ohmmeter (meter for high resistance values of electrical equipment).
3. Disconnect the battery cables before starting to charge the battery.

4. Do not attempt to disconnect the cable coming from terminal B on the generator while the engine is running.
5. The battery voltage is applied to generator terminal B and not to ground.
6. Do not short or ground terminal L of the generator to the integrated CI-regulator.
7. The generator must not come in contact with the jet of a steam cleaner.

Document Title:	Function Group:	Information Type:	Date:
Wiring diagram, electric power supply	**320**	**Service Information**	**2014/4/2 0**
Profile:			

Wiring diagram, electric power supply

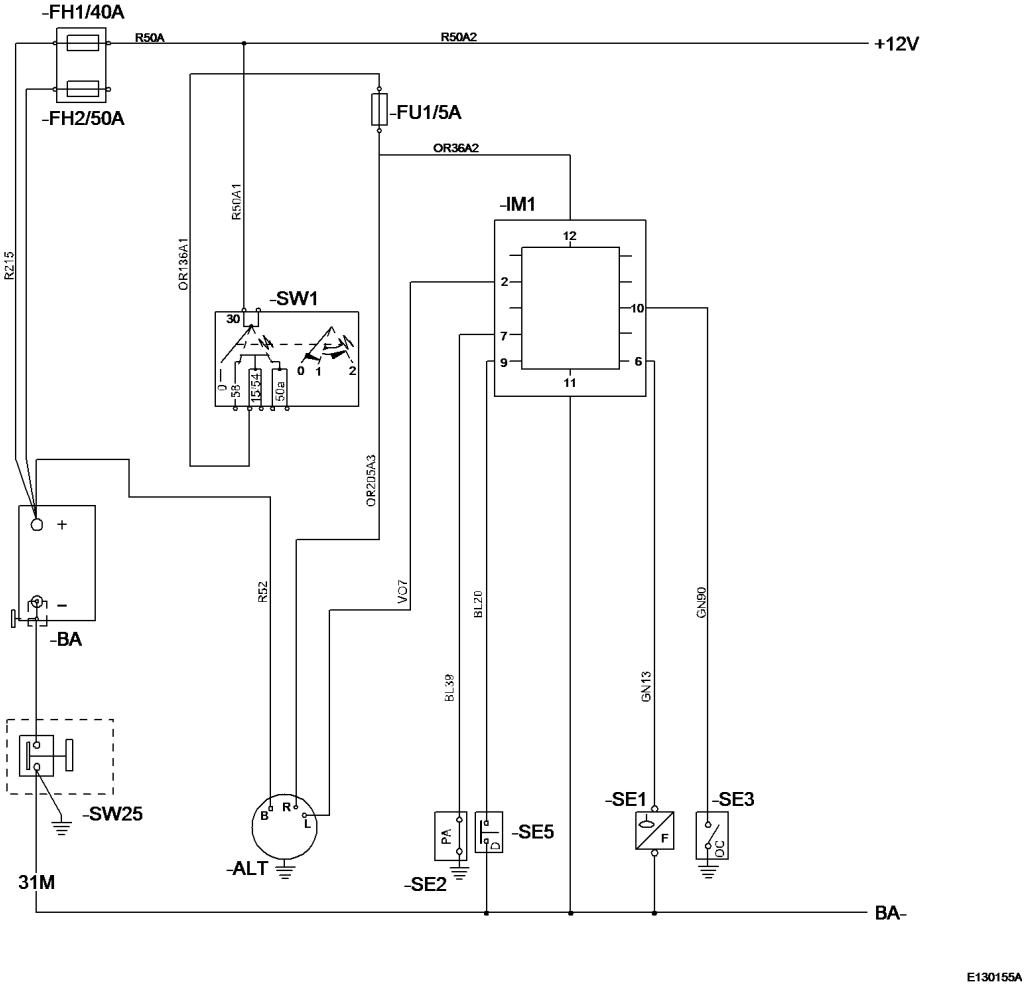

Figure 1

- **ALT**Generator

Document Title:	Function Group:	Information Type:	Date:
Disassemble the generator	**321**	**Service Information**	**2014/4/2 0**
Profile:			

Disassemble the generator

Generator specification

Op nbr

Ohm meter

Designation	AOT25171 AOT25371
Regulator, type	IC
Rated power, V - A	12-40

Disassembly

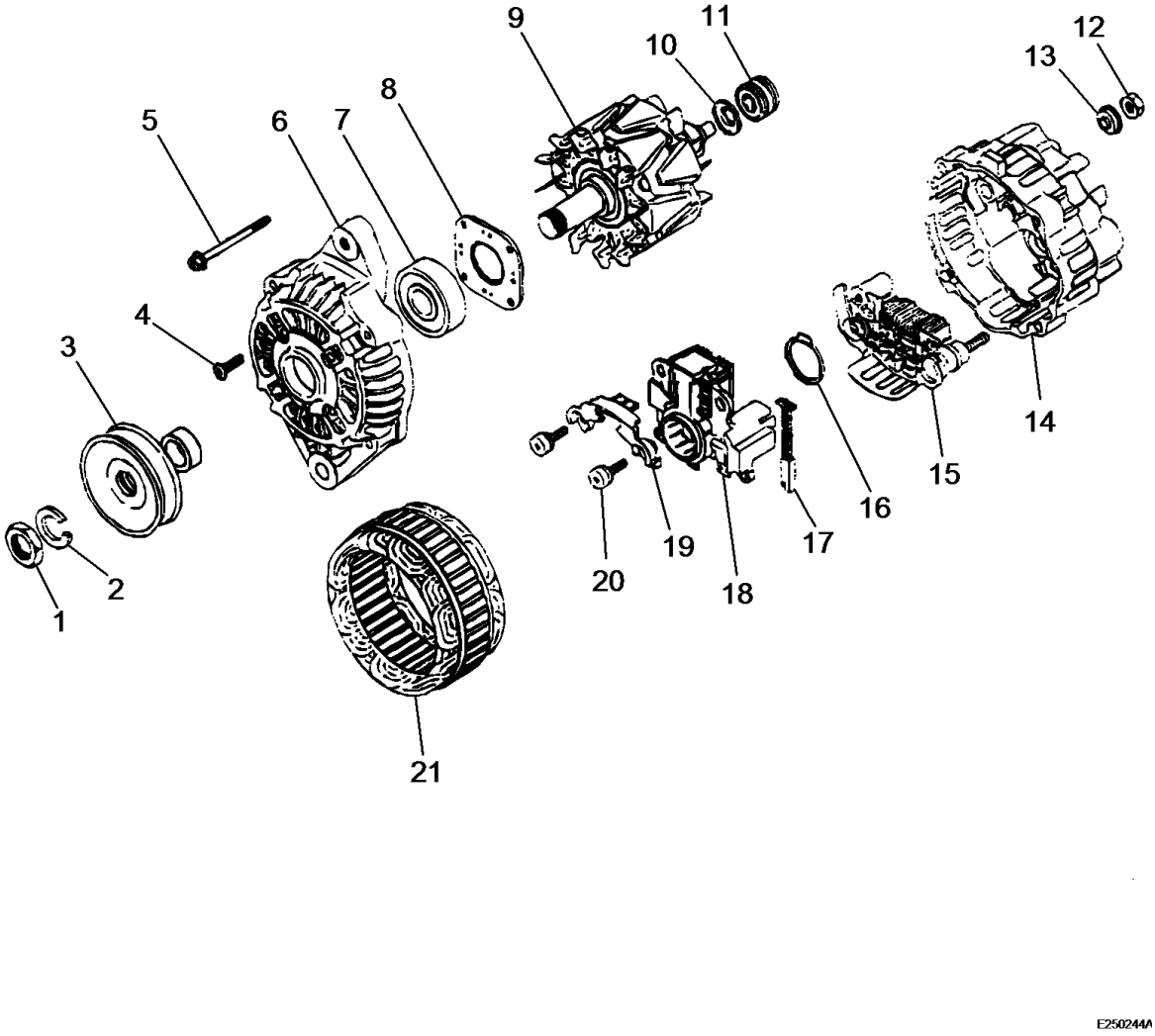

Figure 1

Generator disassembled

1 Nut
2 Washer
3 V-belt pulley
4 Screw
5 Screw
6 Front carrier element
7 Front roller bearing
8 Roller bearing guard
9 Rotor
10 Cover
11 Rear roller bearing
12 Nut
13 Washer
14 Rear carrier element
15 Rectifier
16 Washer
17 Brushes
18 Brush holder
19 Bracket
20 Screws
21 Stator core

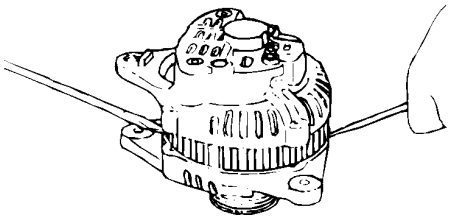

E250245A

Figure 2
Disassembly of generator

1. In order to separate the stator core from the front carrier element lift the core up with a screwdriver, as shown in the illustration.

   CAUTION

   Do not insert the screwdriver too deep in order to prevent the stator core from being damaged.

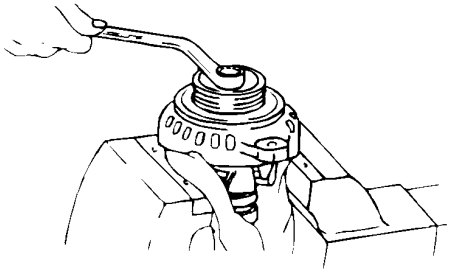

E250246A

Figure 3
Disassembly of the washer

2. Clamp the rotor unit in a vice, use a thick cloth to do so, as shown in the illustration. Unscrew the nut retaining the washer, then remove washer and intermediate piece.

3. Loosen the rotor unit from the front carrier element.

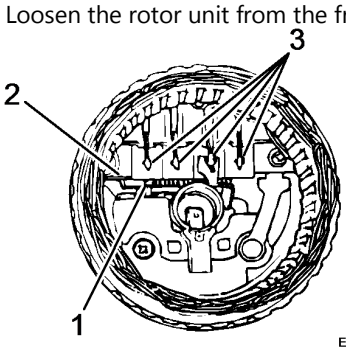

E250247A

Figure 4
Disassembly of the stator core

1. Unsolder the cable
2. Rectifier
3. Unsolder the cable

4. Unsolder the cables branching off the rectifier and remove the stator core from the rectifier.

CAUTION

Unsolder the cables as quickly as possible to avoid damaging the rectifier diodes.

5. Unscrew the fastening screws for the rectifier and remove the rectifier.

6. Check all parts with an ohmmeter as follows:
Diodes on rectifier

Check the resistance between diode and heat sink. First touch the diode with the positive test probe (+) of the ohmmeter and then with the negative test probe (-). If the resistance is infinite in both cases the diode must be open. If the resistance is near zero in both cases, the diode must be closed. Repeat this test on all diodes. If one of the diodes is open or shorted, replace the rectifier.

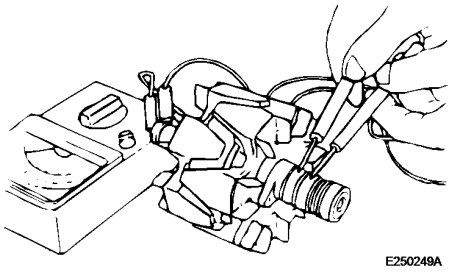

Figure 5
Check the field coil for an open field circuit
Field coil

Check whether current flow between the collector rings is assured (see illustration). If this is not true, there is an open current circuit in the field coil. In this case the complete generator must be replaced.

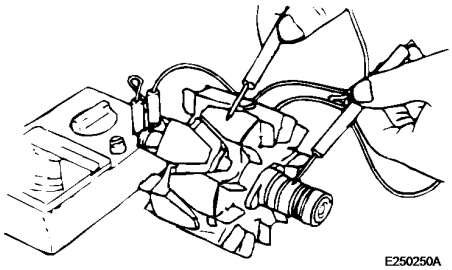

Figure 6
Checking the field coil for a ground circuit
Check whether current flows between collector ring and rod (or core) (see illustration). A current flow indicates the existence a ground circuit in the field coil. In this case the complete generator must be replaced.

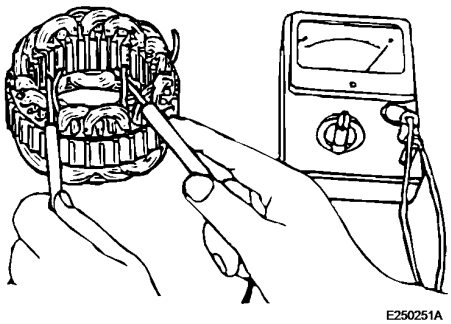

Figure 7
Check the stator core for an open electric circuit
Stator core

Check whether the current flow between the cables is assured (see illustration). If this is not true, there is an open current circuit in the stator core. In this case the complete generator must be replaced.

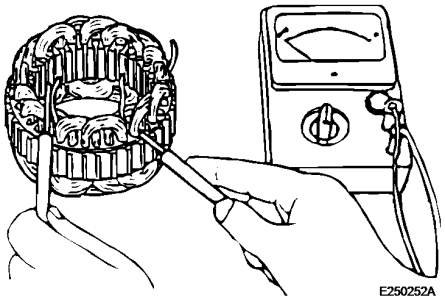

Figure 8
Checking the stator core for a ground circuit
Check whether no current flows between each cable and the stator core (see illustration). A current flow indicates the existence a ground circuit in the stator core. In this case the complete generator must be replaced.

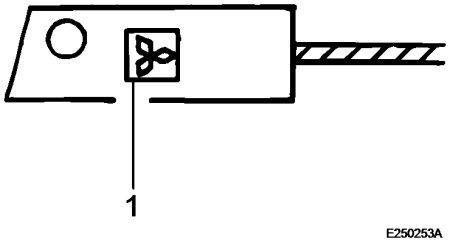

Figure 9
Checking the brushes for wear

1. Wear mark

7. Replace the brushes if they are worn down to the wear mark.

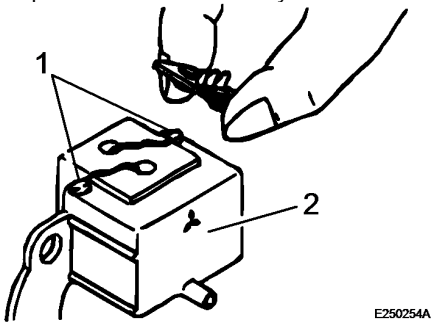

Figure 10
Removing the brushes

1. Unsolder the cable
2. Brush holder

8. Unsolder the cables from the brushes and remove the brushes with springs.

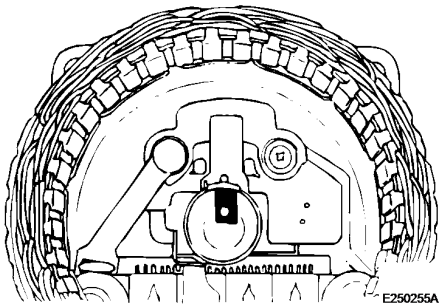

Figure 11
Installing the brushes

Assembling the generator

Op nbr

1. Insert the brushes into the brush holder and solder the cables to the brushes.

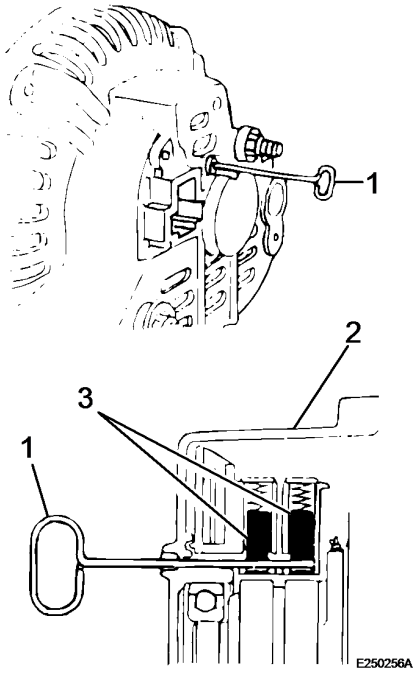

Figure 12
Assembling the generator

1. Wire-type tool
2. Rear carrier element
3. Brushes

Proceed in reverse order to dismantling and use the following method.

2. The rear bearing has a groove for the circlip. Install the snap ring into this groove and make sure that ist tongue is located in the deeper section of the groove.

3. When assembling the new rear bearing align the bearing so that the side with the groove faces towards the circlips.

4. For the assembly of the rear bearing heat up the rear carrier element.

5. Before installing the rotor into the rear carrier element insert a wire-type tool into the opening of the rear carrier

element and loosen the brushes of the collector rings. Once the rotor has been inserted remove the tool.

Document Title:	Function Group:	Information Type:	Date:
Installing the generator	**321**	**Service Information**	**2014/4/2 0**
Profile:			

Installing the generator

Op nbr 321

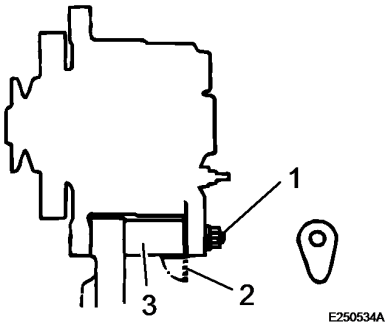

Figure 1
Installation of the generator

1. Supporting bolt
2. Intermediate stay
3. Spacer piece

1. Position the generator. Attach the bolt of the adjustment plate with which the generator is fastened.
2. Place the belt on the pulley. Press the generator away from the engine and adjust the belt.
3. Tighten the bolts.
4. With correct V-belt tension it should be possible to compress the V-belt with high force for approx. 12 mm (4).
5. Connect terminal B.
6. Plug on the cable connector.
7. Assemble the tool box and tighten the screws with 21 Nm.
8. Close the seat console.

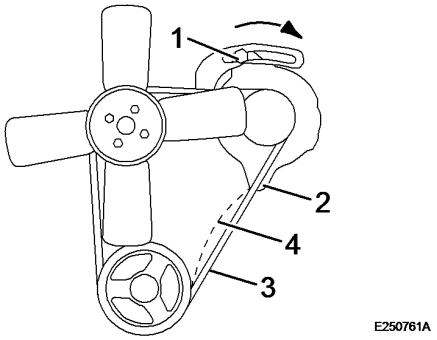

Figure 2
Tensioning the V-belt

1. Screw
2. Screw
3. V-belt
4. Tightness test 12 mm

Document Title:	Function Group:	Information Type:	Date:
Removing the generator	**321**	**Service Information**	**2014/4/2 0**
Profile:			

Removing the generator

Op nbr 321

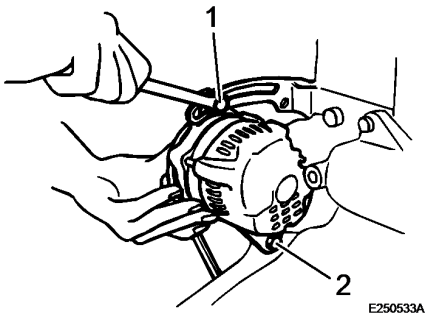

Figure 1
Removing the generator

1. Raise the seat console.
2. Remove the tool box.
3. Disconnect the battery cables.
4. Disconnect the cable from terminal B of the generator.
5. Pull cable connections of the generator.
6. Loosen bolt (1) and the bolt of carrier element (2). Push the generator towards the engine and take off the drive belt.
7. Remove the generator.

Document Title:	Function Group:	Information Type:	Date:
Checking the voltage regulation	**322**	**Service Information**	**2014/4/2 0**
Profile:			

Checking the voltage regulation

Op nbr

Ammeter, voltmeter

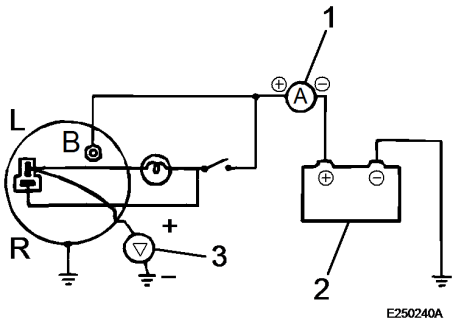

Figure 1
Connections for testing the voltage regulation

1. Ammeter
2. Battery 12 V
3. Voltmeter

Article	Standard
Voltage adjustment at 20 °C	14.7 ± 0.3 V

1. Connect the generator to a 12 V battery with ammeter, voltmeter and switch, as shown in the illustration.

2. The voltmeter must show (0) when the starting contactor is set to OFF. When the starter contactor is set to ON (the engine cannot be started) the value must be lower than the battery voltage.

3. Start the engine, whereby one cable of the ammeter is shorted.

4. With all electrical consumers switched off read the voltmeter when the ammeter shows a reading of 5 Ampere and at an engine speed of 1800 and 2500 rpm. The voltage regulation depends on the temperature of the generator. The following is normally valid: The higher the temperature of the generator, the lower the voltage regulation.

Document Title:	Function Group:	Information Type:	Date:
Checking the performance characteristics	**322**	**Service Information**	**2014/4/2 0**
Profile:			

Checking the performance characteristics

Op nbr

Ammeter

Performance characteristics, specification

Model	Standard	
	Voltage/amperage on the terminals	Speed
AOT25171 AOT25371	12 V / 40 A	5200 rev./min, max

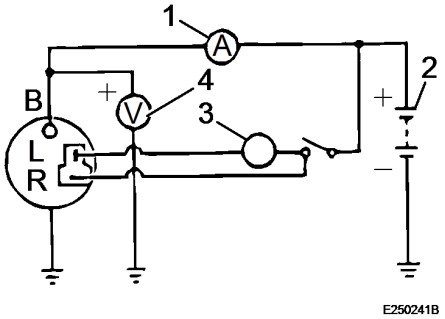

Figure 1
Connections to check the performance characteristics (generator with integrated regulator)

1. Ammeter
2. Battery
3. Generator control light
4. Voltmeter

1. Disconnect the ground cable from the battery.
2. Connect one cable of the ammeter with terminal B on the generator and the other one with the plus pole of the battery. Connect one cable of the voltmeter with terminal B and the other one with ground.
3. Connect the battery ground cable.
4. Start the engine.
5. Switch on all electrical consumers.
6. Raise the engine speed. When the voltmeter shows a reading of 13.5 Volt measure the maximum current output at the specified speed of the generator.

Document Title:	Function Group:	Information Type:	Date:
Starter, preheating relay, ignition switch	**330**	**Service Information**	**2014/4/2 0**
Profile:			

Starter, preheating relay, ignition switch

Pre-heating/starting

Ignition switch-**SW1**:

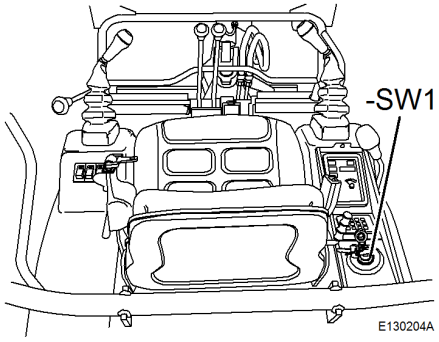

Figure 1

- SW1 Ignition switch

Position 0: Neutral
Position 1: Ignition ON
Position 2: Start

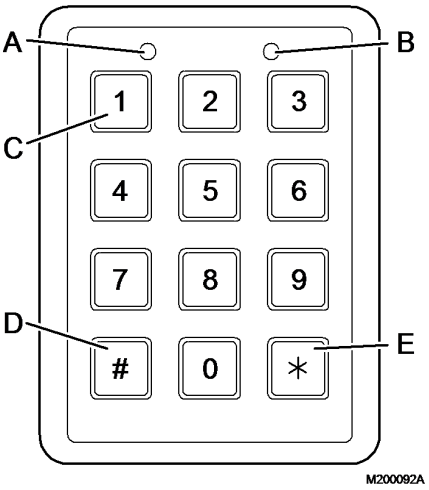

Figure 2

A Function LED (green) function of keyboard

B Function LED (red) function of immobilizer

C Keys for input of code

D Key to modify or delete a stored code

E Key to release the code

Immobilizer (option)
see operating instructions EC13, immobilizer.

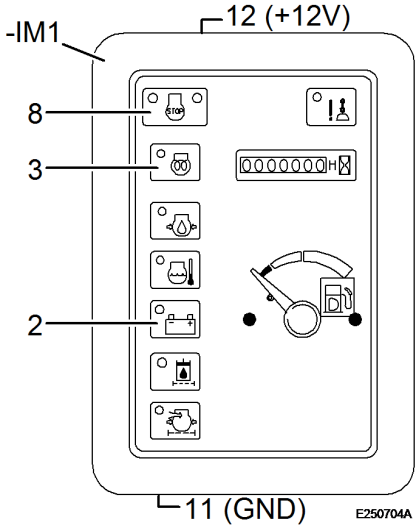

Figure 3

- **IM1** Dashboard

Connection assignment for dashboard (- IM1)

2 Battery charge condition gauge
3 Preheating
8 Engine OFF

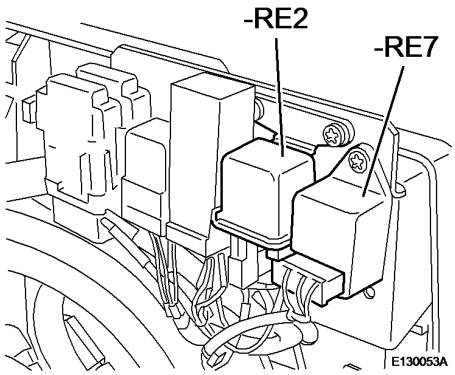

Figure 4

- RE2 Relay for pre-heating element

- RE7 Relay for pre-heating delay

Relay group
Fuses

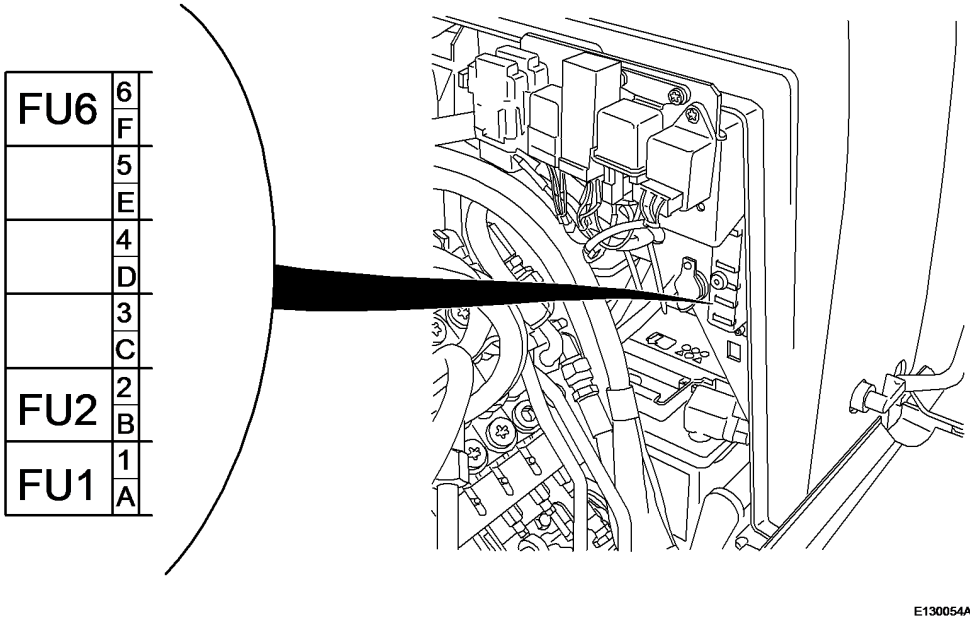

Figure 5

- FU1/5 A	Lock	Engine, dashboard, optional immobilizer
- FU2/5 A	Lock	Slewing/offset, hydraulic support, safe starting
- FU6/15 A	Lock	Main signal horn, service plug, car radio memory, optional flashing beacon, immobilizer

Document Title:	Function Group:	Information Type:	Date:
Starting process	**330**	**Service Information**	**2014/4/2 0**
Profile:			

Starting process

Voltage supply

- The negative pole (–) of the battery is grounded at the engine. When the main switch is in OFF position, the power supply is switched off.

When turning the main switch to position ON, current flows to the following electrical circuits if the ignition switch is in position OFF:

- Battery (+) → Starter connection (B+) → Battery relay
- Battery (+) → slow blowing fuse (40A) →

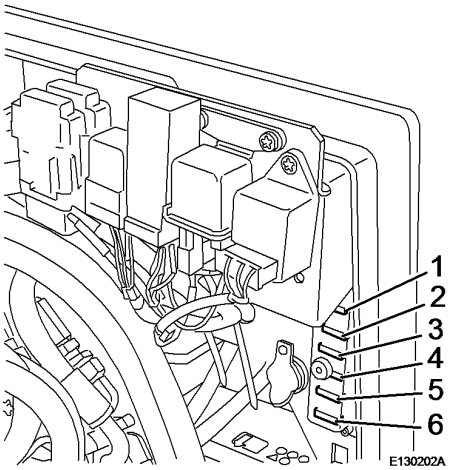

Figure 1

Fuses

1. 15 A-fuse: Horn, socket, front and rear working headlights, flashing beacon (option)
2. 7,5 A-fuse: Warning buzzer
3. 10 A-fuse: Boom mounted working headlights
4. 10 A-fuse: Track width adjustment, solenoid for two-speed drive
5. 5 A-fuse: Solenoid valve for slewing gear / offset
6. 5 A-fuse: Starter relay, Preheating time control relay, dashboard, fuel pump.

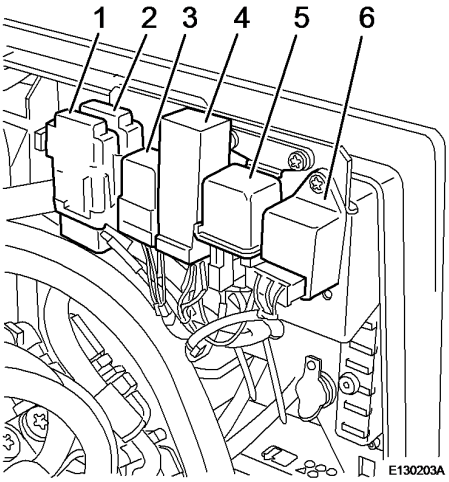

Figure 2

Relays and fuses

1. 40 A-fuse: Main fuse
2. 50 A-fuse: Pre-heating relay
3. Immobilizer relay (optional equipment)
4. Slewing/offsetting
5. Pre-heating of engine
6. Pre-heating delay

Document Title:	Function Group:	Information Type:	Date:
Testing method	**330**	**Service Information**	**2014/4/2 0**
Profile:			

Testing method

- Continuity test in every position with tester.

Figure 1
Ignition switch, testing method

VOLVO

Construction Equipment

Service Information

Document Title:	Function Group:	Information Type:	Date:
Wiring diagram, starter system	**330**	**Service Information**	**2014/4/2 0**
Profile:			

Wiring diagram, starter system

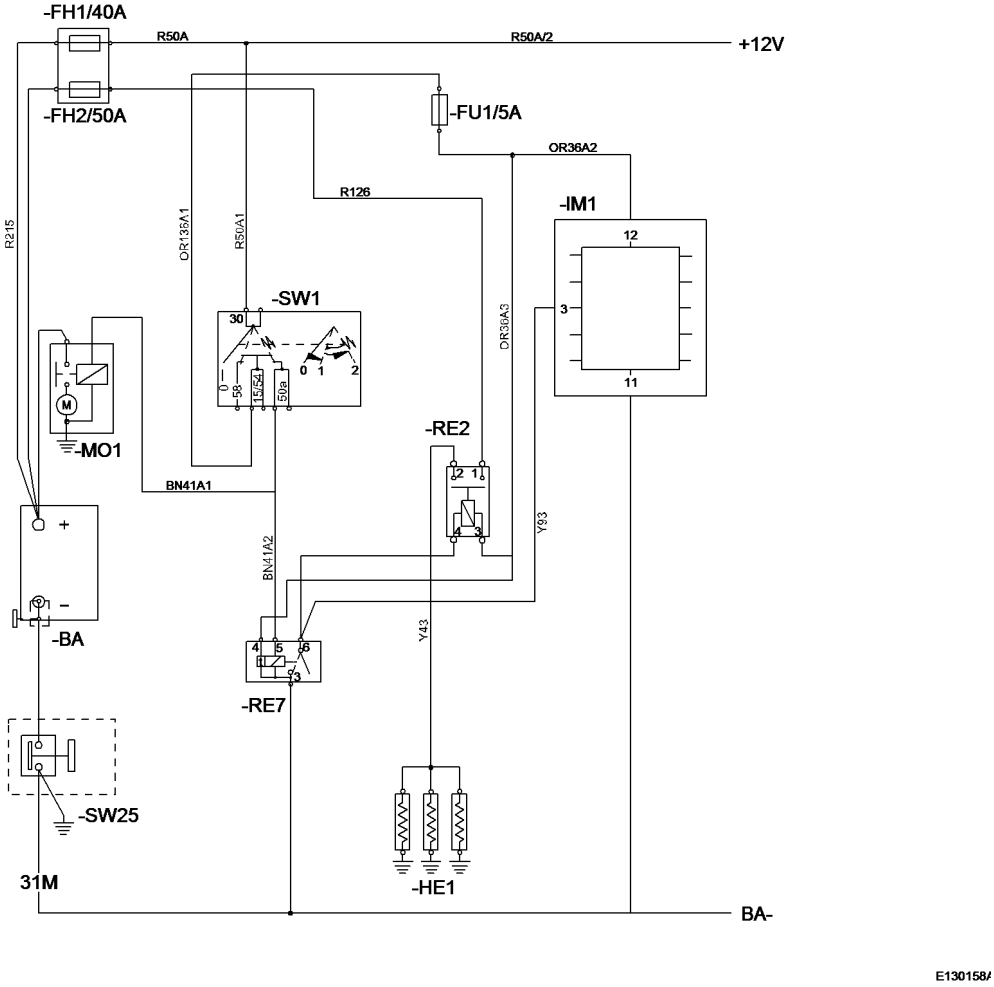

Figure 1

- MO1 Starter

Document Title:	Function Group:	Information Type:	Date:
Ignition switch, specification	**331**	**Service Information**	**2014/4/2 0**
Profile:			

Ignition switch, specification

Ignition switch, specification

Item	Specification
Max. current	B–BR, B–ACC : 30 A B–R1, B–R2 : 60 A B–C : Hort term 75 A, continuous 22 A
Insulating resistance	1 MΩ or more (500 V mega-ohmmeter)

Ignition switch, line specification

No.	Line specification
2A	B+, AVS 5,0 Y
3	BR, AVS 3.0 R/W
5	ACC, AVS 3.0 R
23	R2, AVS 5.0 W
7	C, AVS 3.0 R/SB
26	R1, AVS 3.0 R/GN

Document Title: **Installation of the solenoid**	Function Group: **331**	Information Type: **Service Information**	Date: **2014/4/2 0**
Profile:			

Installation of the solenoid

Op nbr 27301

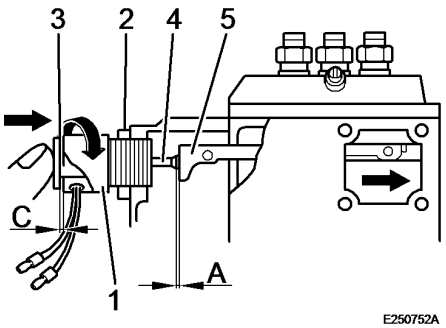

Figure 1
Connection of the solenoid

1. Solenoid
2. Nut
3. Piston
4. Shaft
5. Rack in „no injection“ position

Solenoid, specification

Designation	YMS- 1
Type	Solenoid
Coil resistance	1.6 ± 10% at 20 °C
Stroke, mm	10 ± 0.5
Operating voltage, V	9 V - 15 DC

1. Remove the cover from the connecting rod.

2. Screw nut (2) onto solenoid (1), then tighten the nut down to the inner end of the thread of the solenoid.

3. Cover the thread of the solenoid with sealing paste.
   NOTE!
   Apply sealing compound over the length of the thread that is to be screwed into the regulator housing.

4. Turn solenoid (1) into the governor housing.

5. Move the injection pump rack to a position in which no injection takes place.

6. Turn the solenoid in the governor housing while pressing piston (3) towards the rack, until shaft (4) contacts

connecting rod (5). Clearance "C" must be 0 mm.

7. Turn the solenoid back by 30 degree to 45 degree, clearance "A" is 0.15 to 0.20 mm.

8. Tighten nut (2) with the specified torque of 49 Nm.

9. Fasten the cover of the connecting rod to the injection pump.

10. Start the engine. Set the ignition switch to OFF and check, whether the engine is shut down.

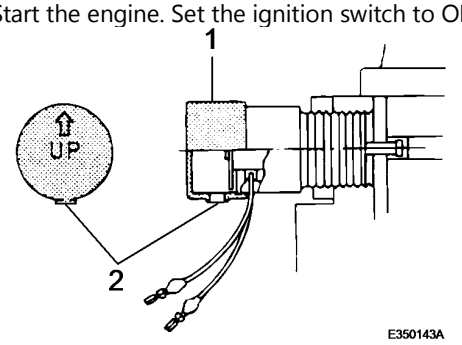

Figure 2
Installation of rubber cap

11. Attach the rubber cap (1) so that the arrow points up and the side with the water drain bore (2) points down (see illustration).

Document Title:	Function Group:	Information Type:	Date:
Key-operated engine shut down system with EDD-solenoid	**331**	**Service Information**	**2014/4/2 0**
Profile:			

Key-operated engine shut down system with EDD-solenoid

General

The engine shut down system controlled by an EDD-solenoid (start excitation) is based on the follow principle:

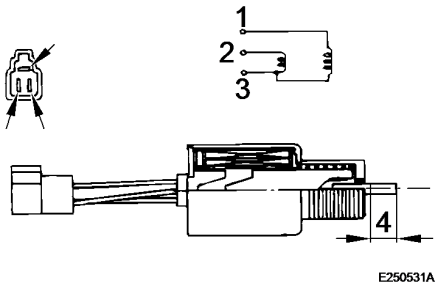

Figure 1
Key operated shut down system

1. Red
2. White
3. Blue
4. Stroke 13 ± 0.5 mm

When the ignition switch is turned to position S the feed coil of the solenoid is excited, whereby the pressure pin is pulled in. While the ignition switch is in position ON and the system is in operation, the holding coil of the solenoid is still excited, so that the pressure pin remains retracted.

If the current flow to the solenoid is interrupted because of a defective cable or any other reason, the solenoid is no longer excited so that the pressure bin is extended by the pressure force, thereby holding the rack of the injection pump in a position where no fuel injection takes place. The engine is shut down.

Similar to the engine shut-down system with EDA-solenoid (shut-down excitation) this system is also a safety device which brings the injection system to a state where no injection takes place if a cable is interrupted or the ignition switch is turned back to OFF.

The cables of the solenoid are colour coded:

Cables with colour coding

N°	Colour of cable	Connected to
1	Red	FEED (feed coil)/starter
2	White	HOLD (holding coil)/ignition switch
3	Blue	COM (ground)

Document Title:	Function Group:	Information Type:	Date:
Starter relay	**331**	**Service Information**	**2014/4/2 0**
Profile:			

Starter relay

Ignition switch

- The switcher distributes the current supply exactly targeted to the different electrical components of the engine starting and shut down system, the pre-heating circuit and the accessory circuits.

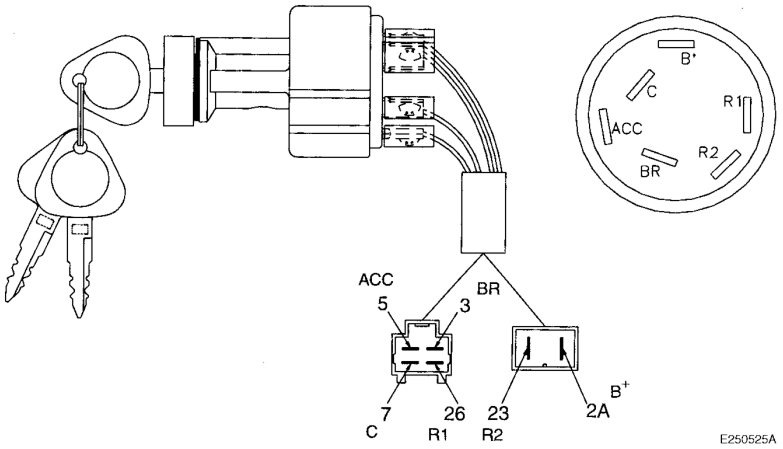

Figure 1
Ignition switch

Switch circuit

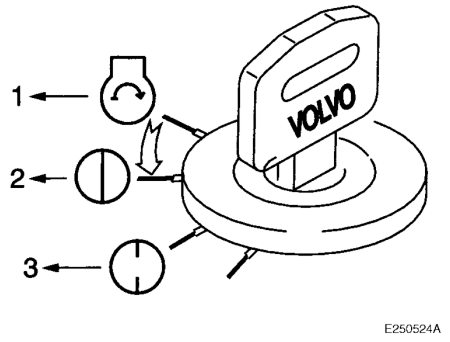

Figure 2
Ignition switch, terminals

1. START
2. ON / PRE
3. OFF

	B+	BR	R1	R2	C	ACC
1	●	●	●			●
2	●					
3	●	●		●	●	●

E250523A

Figure 3
Terminals:

1. Run (ON), pre-heating (PRE)
2. Shut down (OFF)
3. Start (START)

Document Title: **Assembling the starter**	Function Group: **331**	Information Type: **Service Information**	Date: **2014/4/2 0**
Profile:			

Assembling the starter

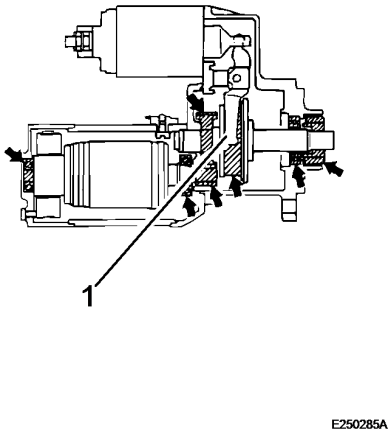

Figure 1
Lubrication points on the starter

1. Apply grease to the contact faces of freewheeling system and lever

Op nbr

Puller

Assembly must be performed in reverse order to disassembly and by following the procedure described below.

1. Assemble the following parts with grease:
   Pinion of armature shaft and reduction gear

   Roller bearing

   Washer and adjustment ring of pinion

   Pinion

   Sliding faces of lever

   CAUTION

   Do not grease the mounting surface of the starter, the brushes, the collector and all other electrical components.

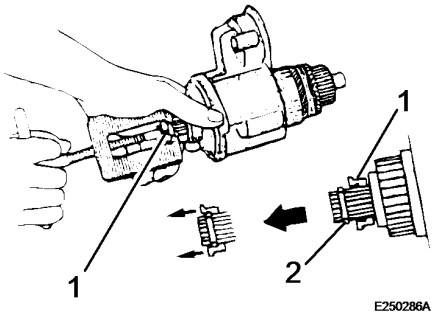

Figure 2
Assembly of the adjustment ring

1. Pinion locating device
2. Adjusting ring

2. Slide the adjustment ring over the pinion. Use a puller to extract the pinion locating device and fit the ring to the groove.

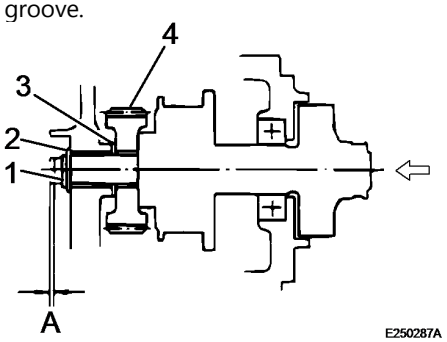

Figure 3
Adjusting the axial play of the pinion

1. Circlip
2. Washer
3. Shim
4. Reduction gear

A. Axial play 0.5 mm

3. Position the pinion, the washer of the reduction gear and the circlip in the middle carrier element

4. Move the pinion in axial direction to measure the axial play (A). When the highest value for the axial play is reached (0.5 mm), adjust the play by using an additional shim.

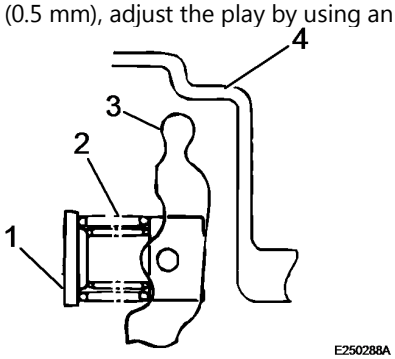

Figure 4
Installing the lever

1. Shim
2. Spring of lever
3. Lever
4. Front carrier element

5. Position the lever correctly.

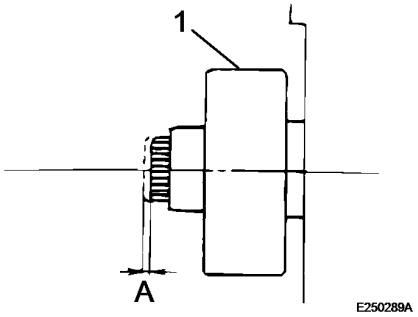

Figure 5
Adjusting the pinion play

1. Pinion

A. Pinion play 0.5...0.2 mm

6. The pinion play must be 0.5...2.0 mm. Hold the pinion in starting position and push it slightly towards the collector end to check if it is moving freely (play). Adjust the play if it does not comply with the specification. In case of excessive play increase the number of shims. Reduce the number of shims if the play is too small.

Document Title: **Dismantling the starter**	Function Group: **331**	Information Type: **Service Information**	Date: **2014/4/2 0**
Profile:			

Dismantling the starter

Op nbr

Spring balance, Ohm meter, dial gauge

Starter, specification

Designation	M2T50381
Type	Displacement by means of solenoid CC (with reduction gear)
Rated power, V - kW	12 - 1.6

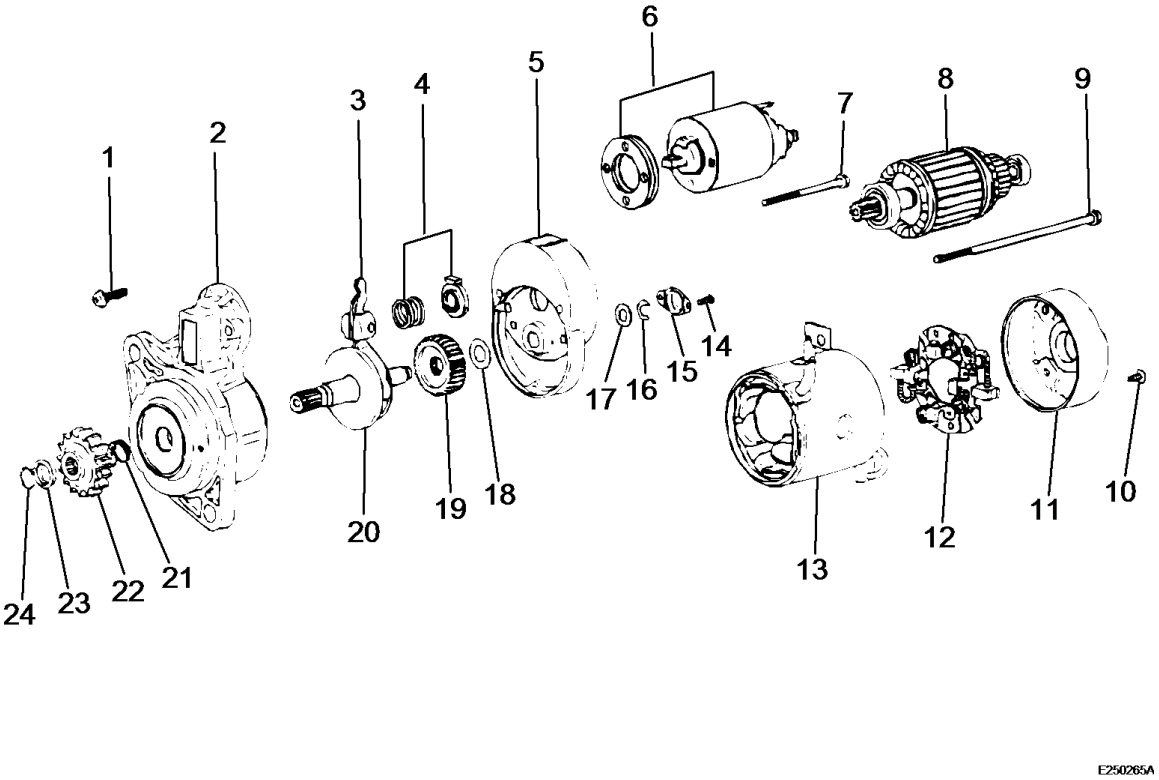

Figure 1
Dismantling the starter

1 Screw
2 Front carrier element
3 Lever
4 Spring unit
5 Middle carrier element
11 Rear carrier element
12 Brush holder unit
13 Housing
14 Screw
15 Cover
21 Spring
22 Pinion
23 Retainer
24 Adjusting ring

6 Magnetic switch
7 Screw
8 Armature
9 Screw
10 Screw
16 Circlip
17 Washer
18 Washer
19 Pinion
20 Pinion

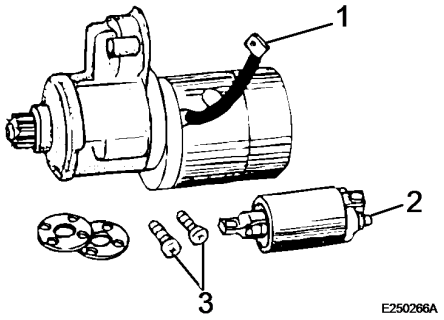

Figure 2
Magnetic switch

1. Cable plug
2. Magnetic switch
3. Screws

1. Slacken the nut that fastens the connector to terminal M on the magnetic switch and disconnect the connector from the magnetic switch.

2. Unscrew the two bolts used to fasten the magnetic switch and remove the magnetic switch.

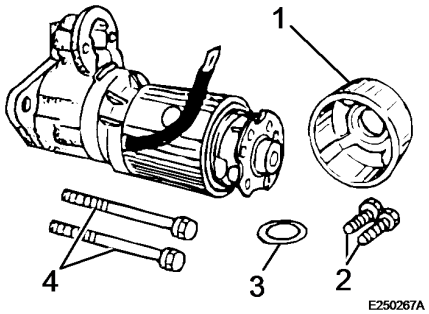

Figure 3
Remove th rear carrier element

1. Rear carrier element
2. Screws for brush holder
3. Washer
4. Screws

3. Remove both screws (4) and the two screws (2) for fastening of the brush holder. Remove the rear carrier element (1).
NOTE!
Keep the rear carrier element together with the washer in a safe place for reinstallation.

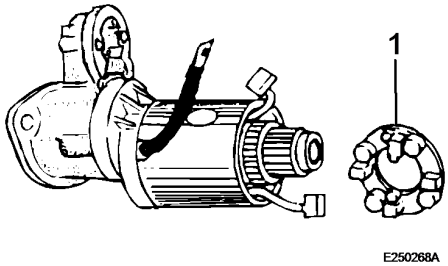

Figure 4
Brush holder

1. Brush holder

4. Remove the unit consisting of housing and brush holder, whereby both brushes have a distance to the collector. Disassemble the armature.

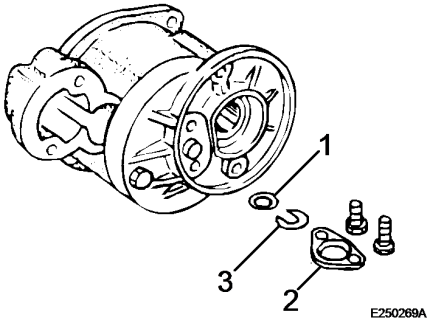

Figure 5
Removing the cover

1. Washer
2. Cover
3. Circlip

5. Remove cover (2), circlip (3) and washer (1).

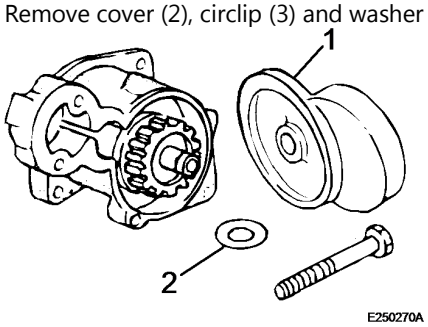

Figure 6
Disassembly of middle carrier element

1. Middle carrier element
2. Washer

6. Unscrew the screws and subsequently remove the middle carrier element. Remove the washer and adjust the axial play of the pinion.

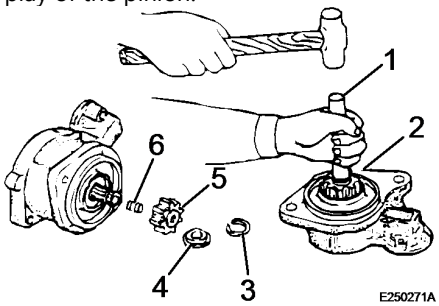

Figure 7
Disassembling the pinion

1. Tool
2. Adjusting ring
3. Circlip

4. Retainer
5. Pinion
6. Spring

7. Place a tube-type tool (1) to the locking device of the pinion and knock with a hammer on the locking device to loosen the adjustment ring.

8. Remove the circlip with a pair of pliers and disassemble the pinion
NOTE!
After each disassembly of the pinion use a new adjustment ring.

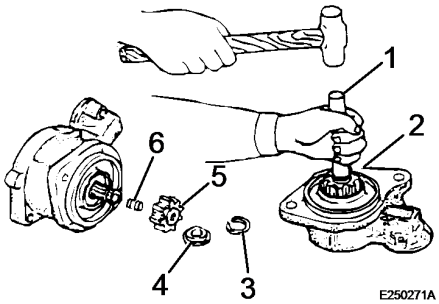

Figure 8
Disassembling the pinion

1. Front carrier element
2. Pinion
3. Reduction gear
4. Reduction gear
5. Lever

9. Remove spring, lever, reduction gear and pinion from the front carrier element.

CAUTION

When dismantling the pinion do not change the specified sequence of spring, lever, and reduction gear.

10. Use a roller bearing puller to remove the ball bearings at the end of the armature. The roller bearing in the front carrier element cannot be changed separately. If this bearing is defective replace the complete front carrier element.

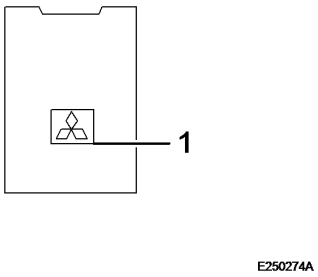

Figure 9
Checking the brushes

1. Wear mark

11. Check all components as follows:
Replace the brushes if they are worn down to the wear mark.

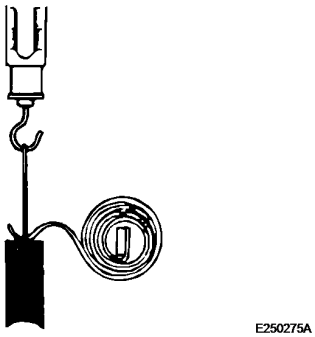

Figure 10
Check the tension of the brush spring

Check the spring tension with a new brush as shown in the illustration. Read the load at the moment when the spring comes off the brush. If the tension is below the limit the spring must be replaced.
Tension of brush spring = 3.0 mm

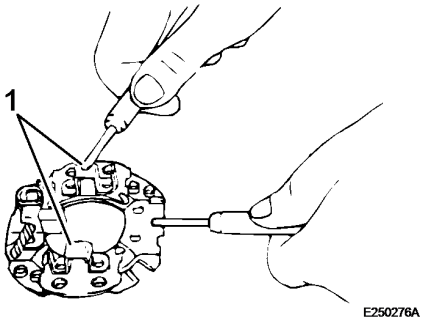

Figure 11
Checking the brush holder for a ground circuit

1. Brush holder

Check that there is no current flow between the positive brush holder and the base of the brush holder (see illustration). If current flow is detected replace the brush holder. Check also if the clamping of the brushes has come loose.

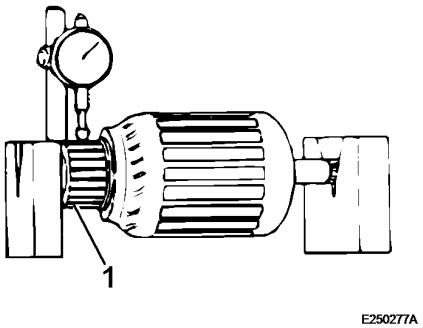

Figure 12
Checking the non-circularity of the collector

1. Collector

Rest the armature in V-shaped prisms and determine the non-concentricity of the collector with a dial gauge. If the non-concentricity exceeds the limit value rework the collector on a lathe. The rework must take place within the diameter limits of the collector.

Non-concentricity of collector = 0.03...0.10 mm

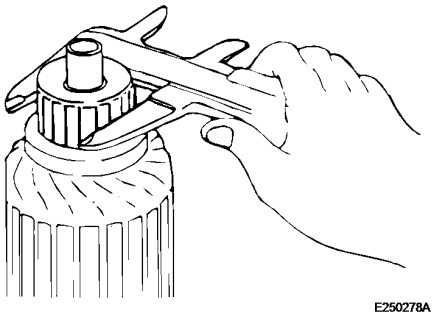

Figure 13
Measuring the collector diameter
Measure the diameter of the collector. Replace the starter if the limit value is exceeded.

Collector diameter = 32 mm
Limit value of collector = 31 mm

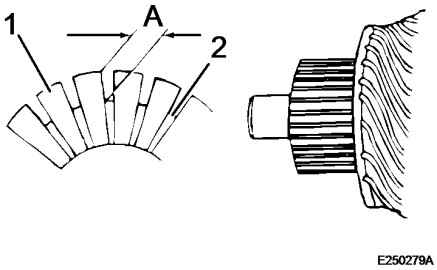

Figure 14
Wear of the mica insulation

1. Lamella
2. Mica

A. Wear

Check how far the mica insulation between the adjacent lamellas has worn off. If the nlimit value is exceeded repair the mica insulation or replace the starter.

Wear of the mica insulation = 0.5 mm
Limit value of the mica insulation = 0.2 mm

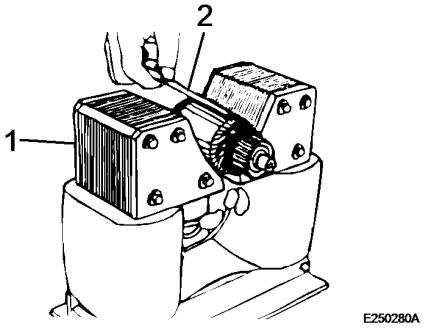

Figure 15
Checking the armature for short circuit

1. Armature testing unit
2. Hacksaw blade

Lay the armature into an armature testing unit and turn it slowly while holding a hacksaw blade above the armature core. The hacksaw blade will swing towards the core when it detects a slot containing a sorted winding. In case of a shorted armature the starter must be replaced.

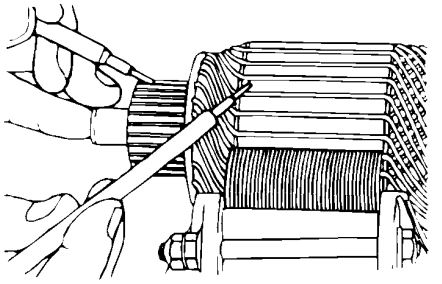

E250281A

Figure 16
Checking the armature for short to ground
Check for shorting to ground in the area of the armature (see illustration). Detection of a current flow between collector lamella and coil indicates that the armature is shorted to ground and that the starter needs to be replaced.

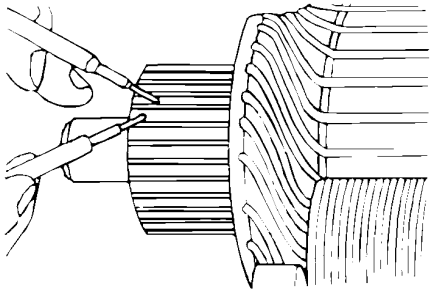

E250282A

Figure 17
Testing the armature for an open electrical circuit
Check for an open electrical circuit in the area of the armature (see illustration). Detection of no current flow between the lamellas indicates that the armature has an open electrical circuit and that the starter needs to be replaced.

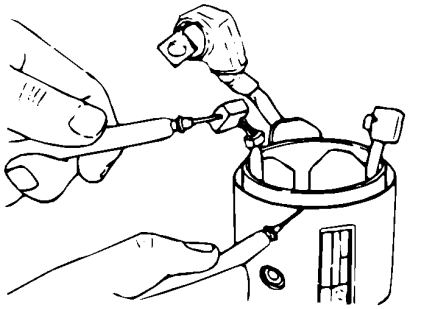

E250283A

Figure 18
Checking the field coils
Replace the housing if:

a. there is a current flow between brush and housing,
b. there is no current flow between the brushes,
c. pole shoe or coil are loose.

Replace the roller bearings if they generate noise or do not rotate freely.

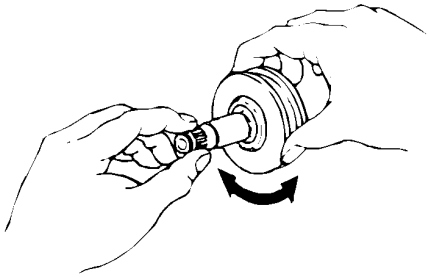

E250284A

Figure 19
Checking freewheeling
Replace the freewheeling system if:

a. the pinion is not locked when being turned in anti-clockwise direction, or if it dies not turn freely when being turned in opposite direction (clockwise).
b. the pinion is worn or damaged.

CAUTION

Do not clean the freewheeling system with a cleansing agent.

If the ball bearing generates loud noise or does not rotate freely replace the front carrier element.

Replace the reduction gears if they are worn or damaged.

Brushes

Brush holder

Armature

Field coils

Roller bearing

Freewheeling

Front carrier element

Reduction gear

Document Title:	Function Group:	Information Type:	Date:
Removing the starter	**331**	**Service Information**	**2014/4/2 0**
Profile:			

Removing the starter

Op nbr 3314

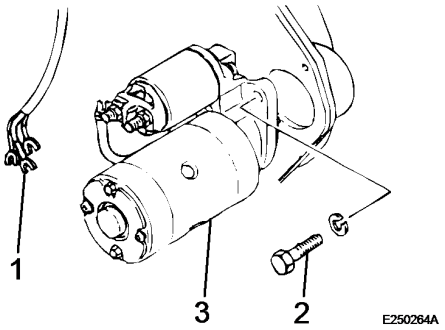

Figure 1
Removing the starter

1. Connecting cable
2. Screws
3. Starter

1. Raise the seat console.
2. Remove the tool box.
3. Disconnect the ground cable from the battery.
4. Disconnect the connecting cable (1) from the starter.
5. Unscrew both screws (2) and take the starter (3) off.

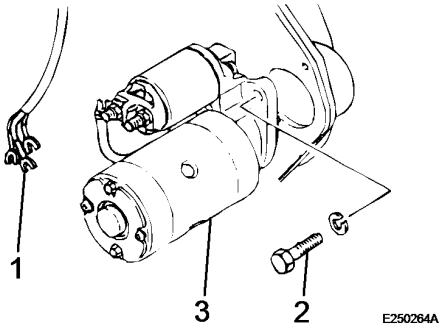

Figure 2
Installing the starter

1. Connecting cable
2. Screws
3. Starter

Installing the starter

Op nbr 3314

1. Mount the starter to the engine block.
2. Turn in both screws and tighten with 21 ± 3 Nm.
3. Connect the connecting cable to the starter.
4. Connect the ground cable from the battery.
5. Assemble the tool box and tighten the screws with 21 Nm.
6. Close the seat console.

Document Title: **Tests before disassembly**	Function Group: **331**	Information Type: **Service Information**	Date: **2014/4/2 0**
Profile:			

Tests before disassembly

Op nbr

Play between pinion and seat (pinion play)

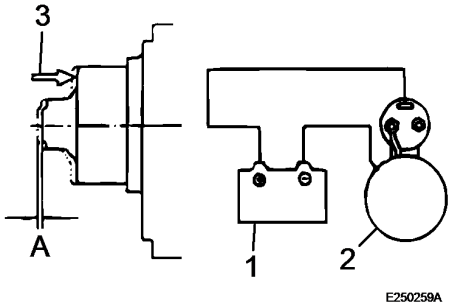

Figure 1
Connections to measure the pinion play

1. Battery
2. Starter
3. Push pinion in direction of arrow

1. Connect the starter to a 12V battery (see illustration) to move and hold the the pinion in start position.

   CAUTION

   Considering the current quantity that flows through the series winding of the solenoid, this test must be performed within a period of 10 seconds.

2. Slide the pinion manually towards the collector end to determine the free movement (the pinion play).

3. The pinion play (A) must be 0.5...2.0 mm. If the play (A) is outside the limits, it must be adjusted accordingly. For this purpose the number of shims on the magnetic switch is reduced or increased. Increasing the number of shims reduces the play.

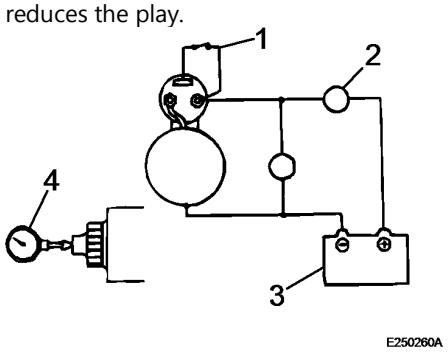

Figure 2

Terminals to check the characteristics without load

1. Switch
2. Ammeter
3. Battery
4. Tachometer

Characteristics without load

4. Connect the starter with an ammeter, capable to display several hundred Ampere, to a 12V battery (see illustration).

5. Close the power contactor and check whether the pinion moves to starting position and the starter works at speeds exceeding the specified speed. If current draw and/or operating speed are beyond the standard remove, check and repair the starter.

Component		Standard
Designation		M2T50381
Rated power, V - kW		12 - 1.6
Characteristics without Load	Terminal voltage, V	11.5
	Current surge, A	100, max.
	Terminal voltage, V	3 000 rpm

CAUTION

The cables used for this test should be as big as possible. Tighten the terminals properly.

NOTE!
The starter is fitted with a reduction gear. Do not mix up the gear noises with abnormal noises.

When measuring the starter speed at the end of the pinion the pinion may be accidently displaced.

Magnetic switch

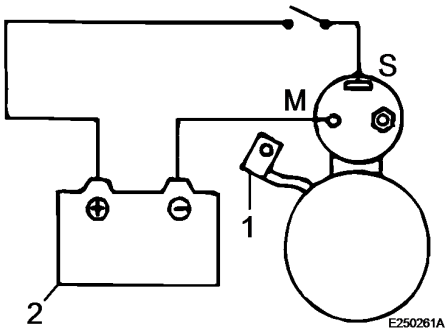

Figure 3
Terminals to check the feed coil

1. Plug disconnected
2. Battery

Starter, specification

6. Pull the plug off terminal M on the magnetic switch.

7. Connect the magnetic switch with a disconnector to a 12V battery to test the feed coil (see illustration). Close the magnetic switch and check whether the pinion moves. If not, the magnetic switch is defective.

CAUTION

Considering the current quantity that flows through the series winding of the solenoid, this test must be performed within a period of 10 seconds.

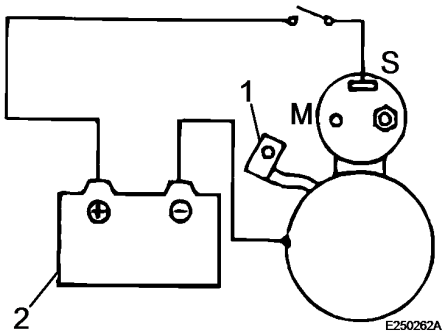

Figure 4
Terminals to check the holding coil

1. Plug disconnected
2. Battery

8. Connect the magnetic switch with a disconnector to a 12V battery to test the holding coil (see illustration). Close the magnetic switch and pull the pinion manually away from the collector end. Release the pinion again and check whether it remains in its position. If the pinion returns to its initial position the magnetic switch is defective.

CAUTION

Considering the current quantity that flows through the series winding of the solenoid, this test must be performed within a period of 10 seconds.

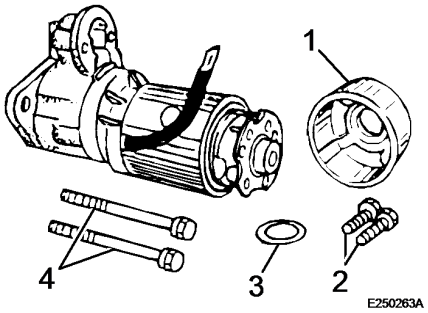

Figure 5
Terminals to check the return of the pinion to initial position

1. Rear carrier element
2. Screws of brush holder
3. Washer
4. Screws

9. Connect the magnetic switch with a disconnector to a 12V battery to test the return of the pinion to initial position (see illustration). Close the magnetic switch and pull the pinion manually away from the collector end. Release the pinion to check whether it returns to initial position immediately after releasing. If not, the magnetic switch is defective.

CAUTION

Considering the current quantity that flows through the series winding of the solenoid, this test must be performed within a period of 10 seconds.

Document Title:	Function Group:	Information Type:	Date:
Characteristics of the glow plug system	**333**	**Service Information**	**2014/4/2 0**
Profile:			

Characteristics of the glow plug system

Pre-heating plug relay

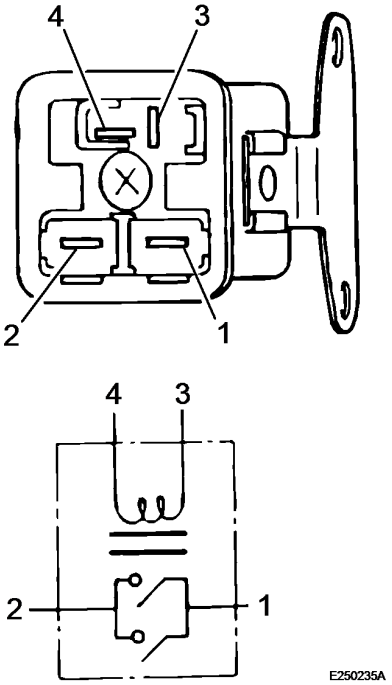

Figure 1
Glow plug relay

Designation	G71SP
Rated voltage	12 V DC
Continuous rated power	1 minute
Coil resistance	13

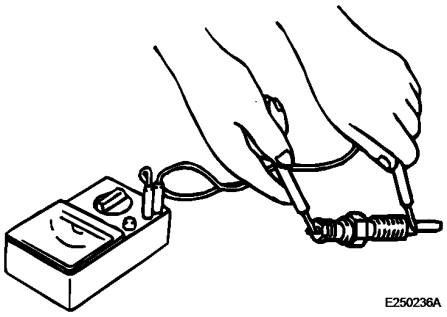

Figure 2
Checking the glow plug

Document Title:	Function Group:	Information Type:	Date:
Checking the glow plug	**333**	**Service Information**	**2014/4/2 0**
Profile:			

Checking the glow plug

Voltage regulation, specification

Op nbr

Ohmmeter

Glow plugs, specification

Designation	Y-145 T
Regulator, type	with sheath
Rated voltage, V	10.5
Current drain A	9.7 ± 1.0 (30 seconds at rated voltage)
Resistance, Ω	0.55

Check the current flow between terminal and housing, as shown in the illustration. If the current flow is not assured or the resistance is too high, replace the glow plug

VOLVO

Construction Equipment

Service Information

Document Title:	Function Group:	Information Type:	Date:
Installing the glow plug	**333**	**Service Information**	**2014/4/2 0**
Profile:			

Installing the glow plug

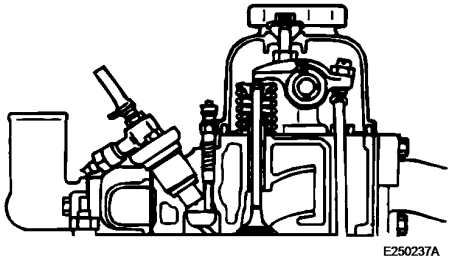

Figure 1
Glow plug installation

Installation

Op nbr 379

1. Screw the pre-heating plug into the cylinder head and tighten with 17.2 ± 2.5 Nm.
2. Connect the electrical supply and tighten the nut with 0.98...1.47 Nm.

VOLVO
Construction Equipment

Service Information

Document Title:	Function Group:	Information Type:	Date:
Boom/roll over protection system	**350**	**Service Information**	**2014/4/2 0**
Profile:			

Boom/roll over protection system

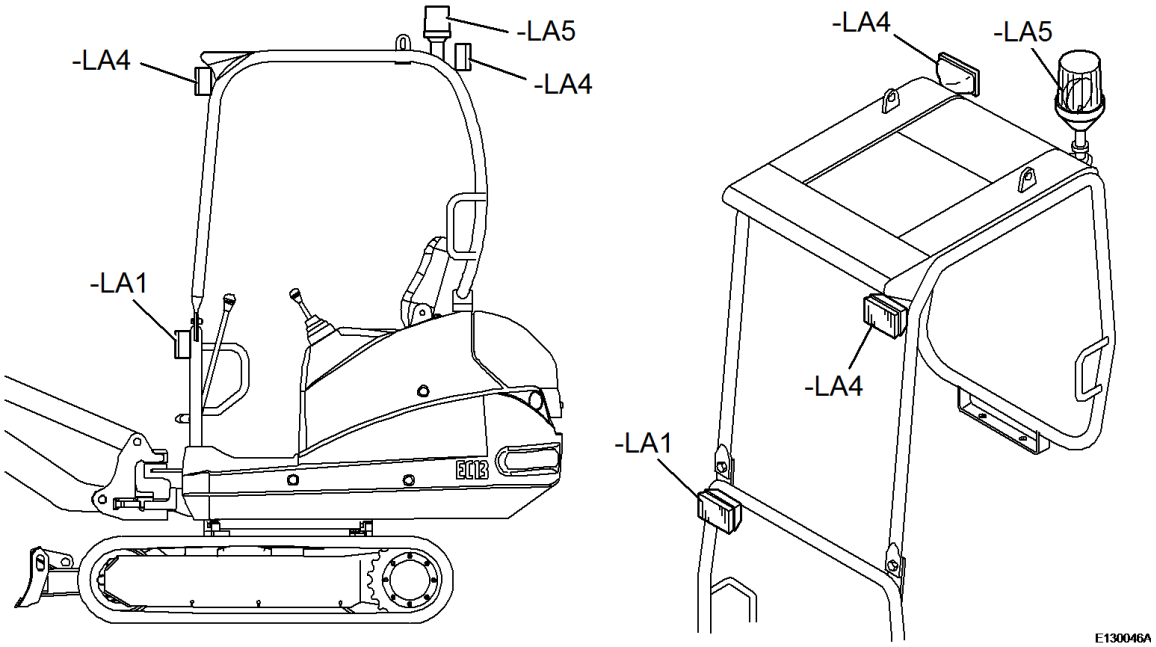

Figure 1

-LA1 Headlights, boom
- LA4 Headlight, cabin/weather roof, front and rear
- LA5 Flashing beacon

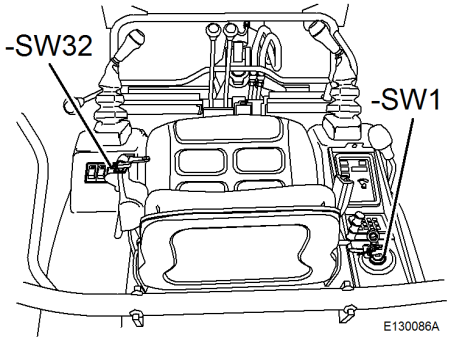

Figure 2

- SW1 Ignition switch

- SW32 Switch for boom-mounted headlights and rear headlights on roll over protection structure

Headlights on boom/roll over protection structure

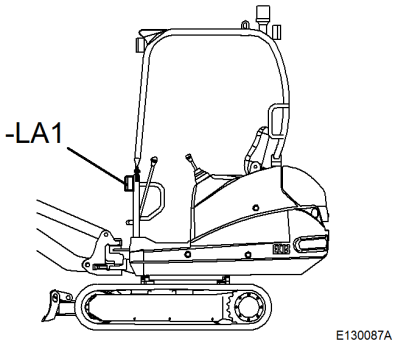

Figure 3

- **LA1**Headlights, boom

Headlights, boom

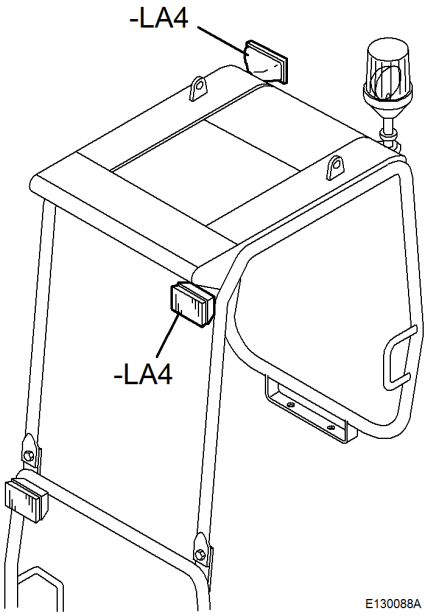

Figure 4

- **LA4**Headlights on roll over protection structure, front left and rear right

Headlights on roll over protection structure

Fuses

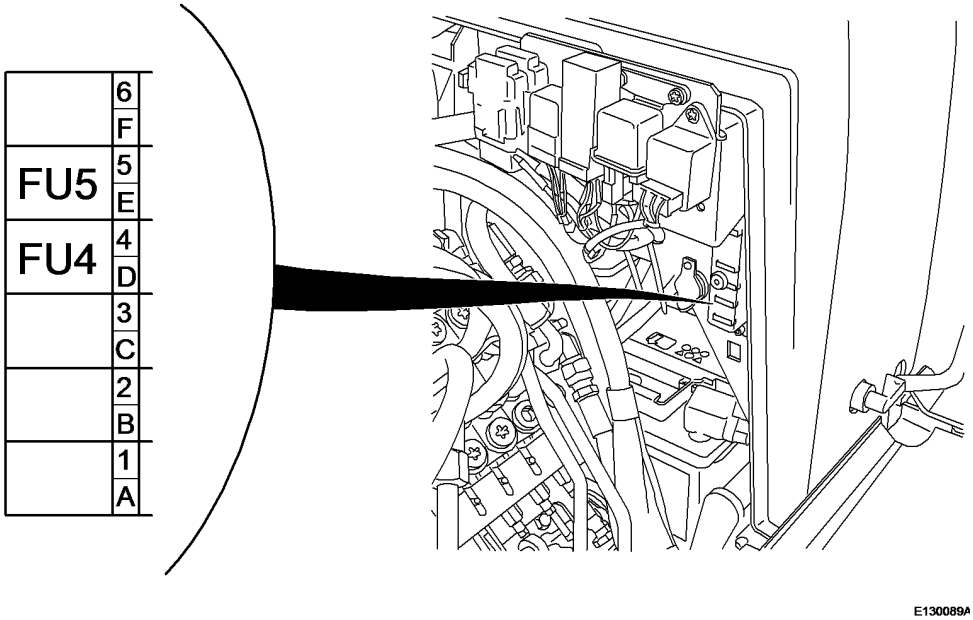

Figure 5

- **FU4/20 A** Lighting
- **FU5/15 A** Cabin and optional travel alarm system

Document Title:	Function Group:	Information Type:	Date:
Wiring diagram for lighting	**350**	**Service Information**	**2014/4/2 0**
Profile:			

Wiring diagram for lighting

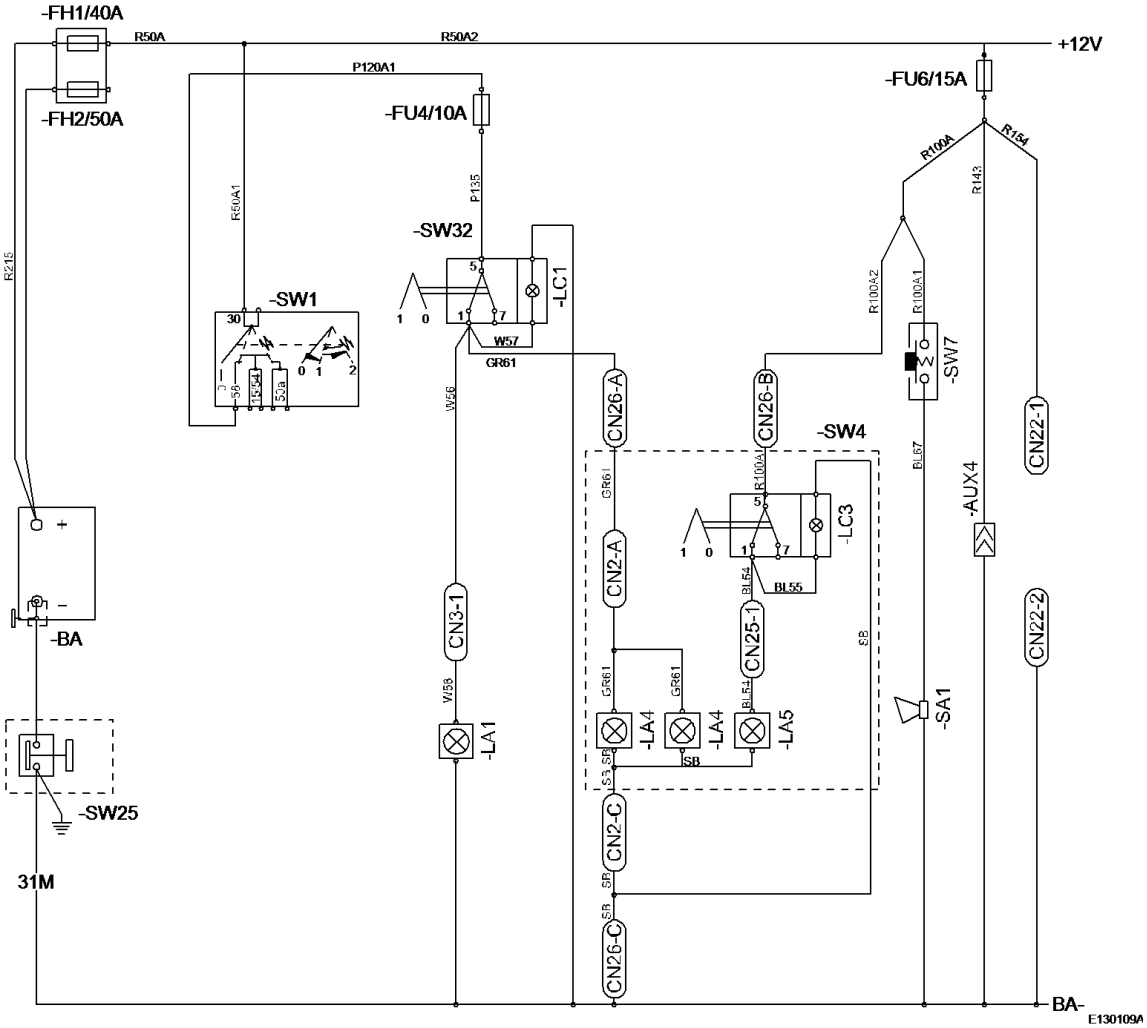

Figure 1

- LA1	Headlights/boom
- LA4	Headlights on roll over protection structure
- LA5	Flashing beacon

Document Title:	Function Group:	Information Type:	Date:
Working headlights and main headlights, description	**356**	**Service Information**	**2014/4/2 0**
Profile:			

Working headlights and main headlights, description

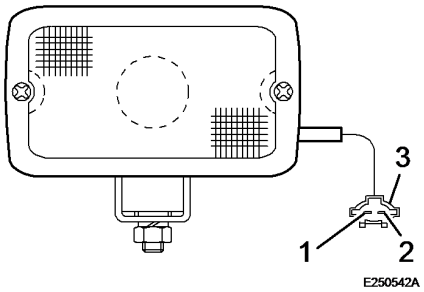

Figure 1
Working headlights and main headlights

1 AVS 1.25 R/W (B+)
2 AVS 1.25 SB (E)
3 AVS 1.25 R/BL (B+)
4 AVS 1.25 SB (E)

Document Title:	Function Group:	Information Type:	Date:
Working headlights and main headlights, specification	**356**	**Service Information**	**2014/4/2 0**
Profile:			

Working headlights and main headlights, specification

Item	Specification
Rated voltage	12 V
Electrical power consumption	55 W/light bulb
Light bulb type	Halogen (H3)

Document Title:	Function Group:	Information Type:	Date:
Operating/control elements on driver's platform	**360**	**Service Information**	**2014/4/2 0**
Profile:			

Operating/control elements on driver's platform

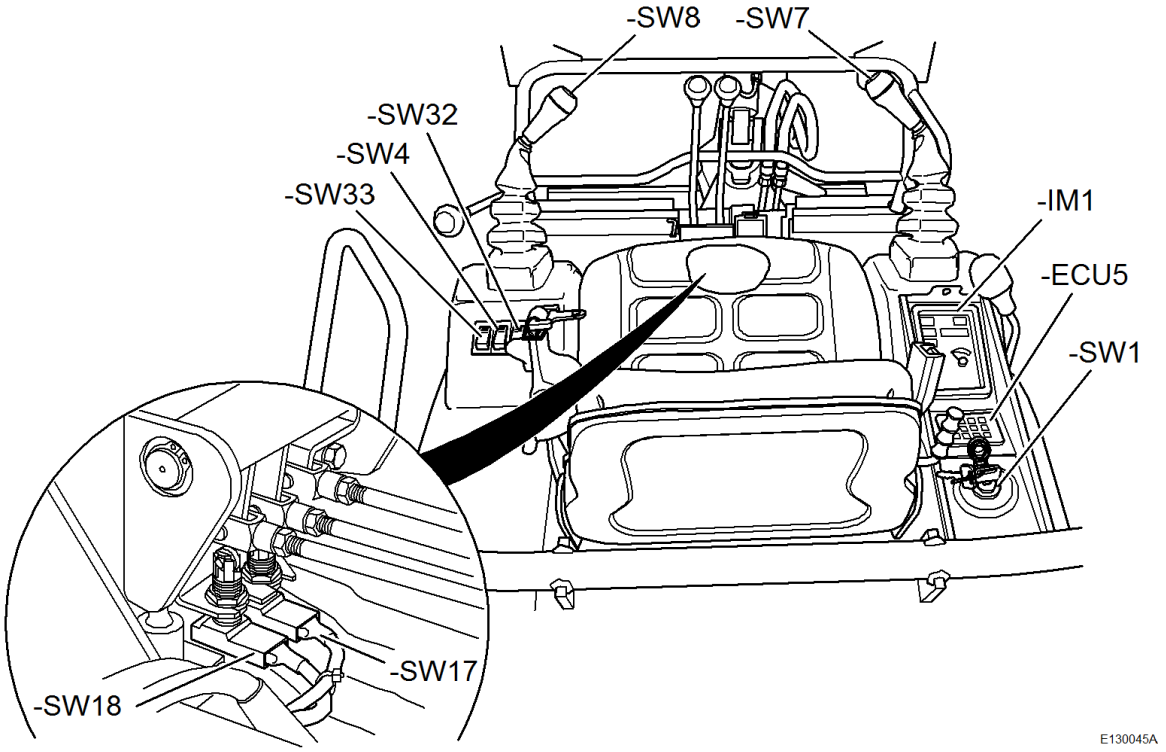

Figure 1

- ECU5	Numerical keyboard for immobilizer	**- IM1**	Dashboard
- SW1	Ignition switch	**- SW17**	Switch travel lever right/option warning buzzer NAFTA
- SW4	Switch, flashing beacon	**- SW18**	Switch travel lever left/option warning buzzer NAFTA
- SW7	Switch, warning horn	**- SW32**	Switch for boom-mounted headlights and rear headlights on roll over protection structure
- **SW8**	Switch, slewing/offsetting	**- SW33**	Switch for fast speed and track width adjustment (only for version XTV)

Battery disconnecting switch

The battery disconnecting switch (**-SW25**) must always be switched off for longer resting periods of the machine and for repair work in the electric system.

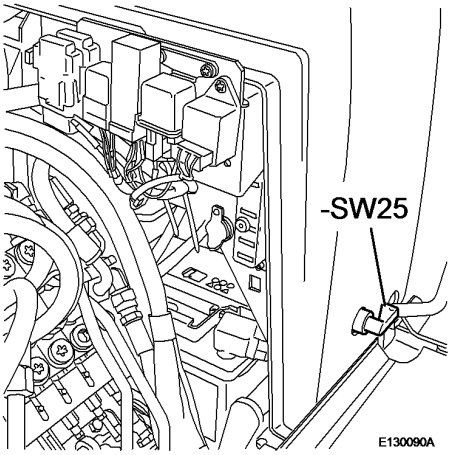

Figure 2

- **SW25** battery disconnection

Roll over protection structure

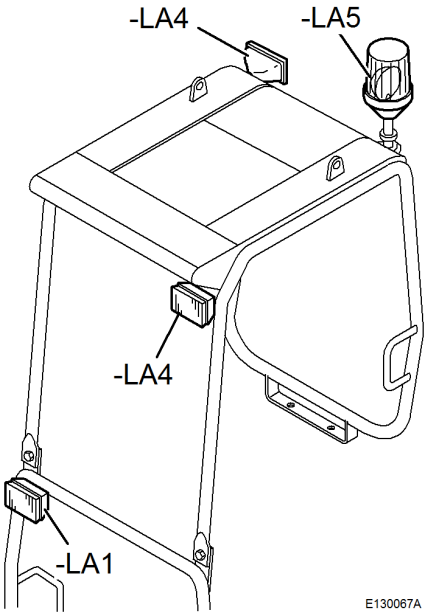

Figure 3

- **LA1** Headlights, boom
- **LA4** Headlights on roll over protection structure, front left and rear right
- **LA5** Flashing beacon

Socket

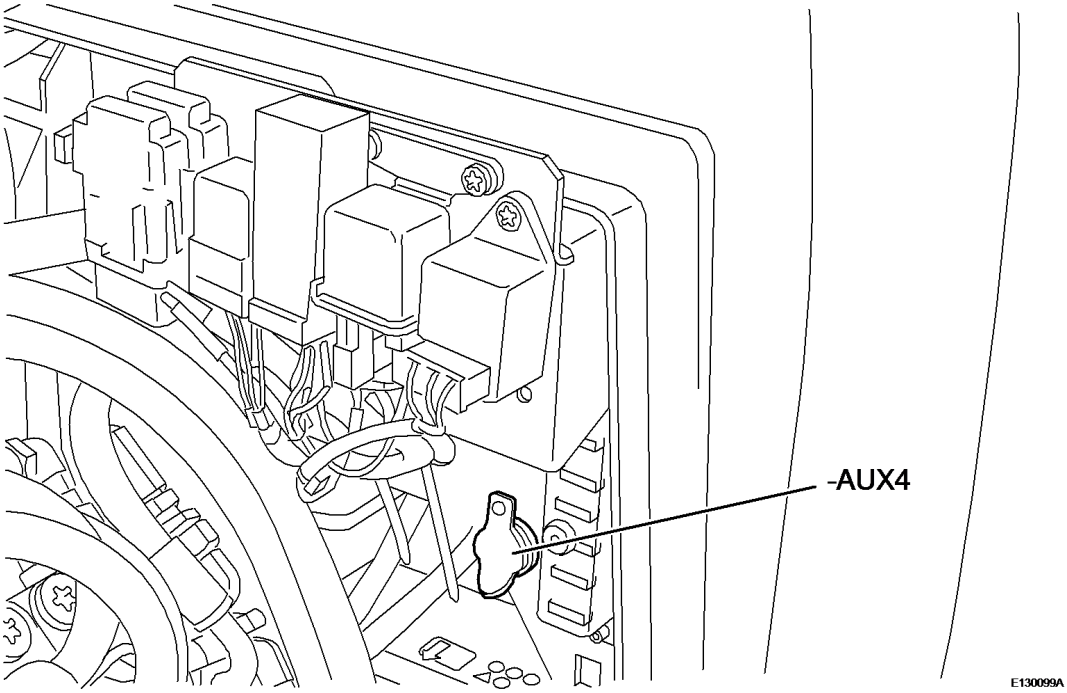

Figure 4

- AUX4 Socket

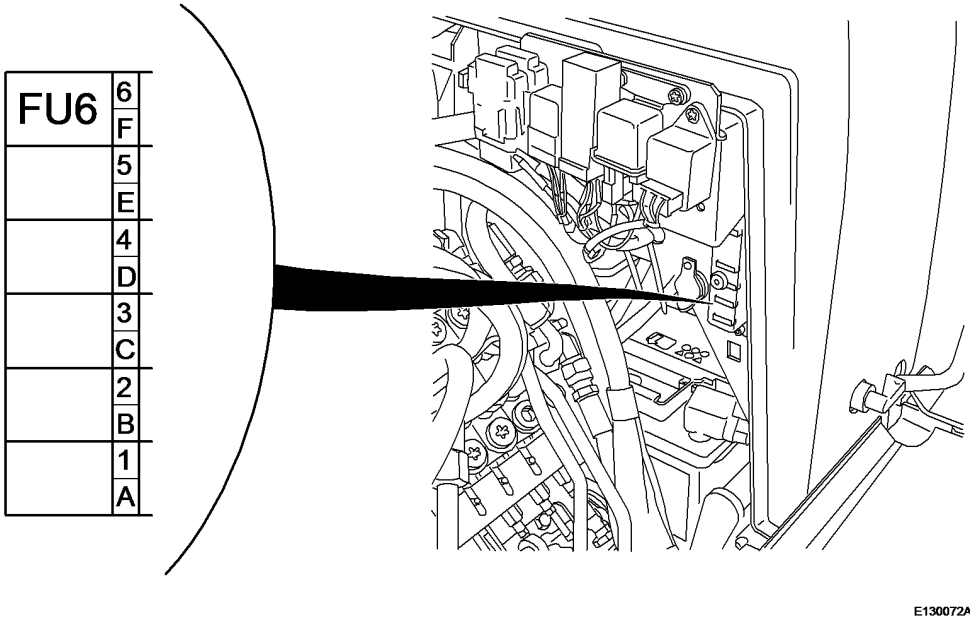

Figure 5

- FU6/15 A Fuse for main signal horn, service plug, car radio memory, flashing beacon, optional immobilizer

VOLVO

Construction Equipment

Service Information

Document Title:	Function Group:	Information Type:	Date:
Wiring diagram, socket (12 V)	**360**	**Service Information**	**2014/4/2 0**
Profile:			

Wiring diagram, socket (12 V)

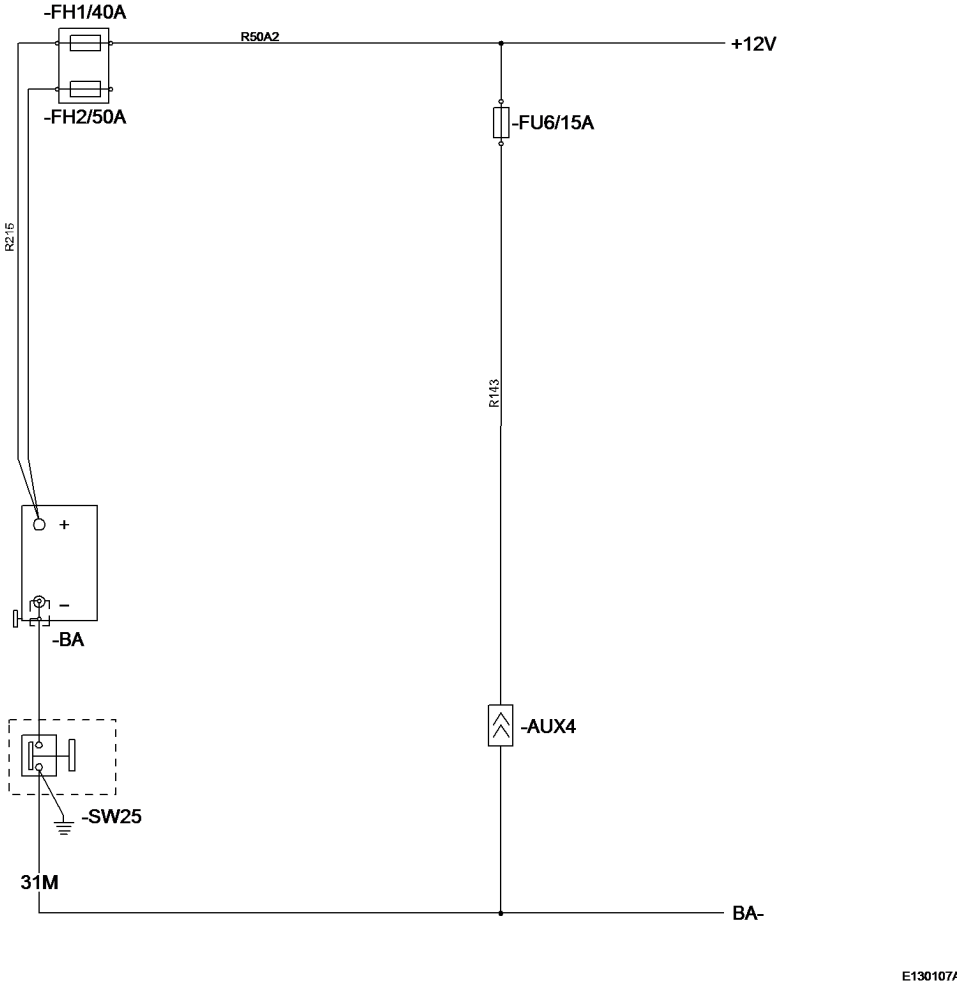

Figure 1

- AUX4	Socket (12V)

Document Title:	Function Group:	Information Type:	Date:
Warning system	**362**	**Service Information**	**2014/4/2 0**
Profile:			

Warning system

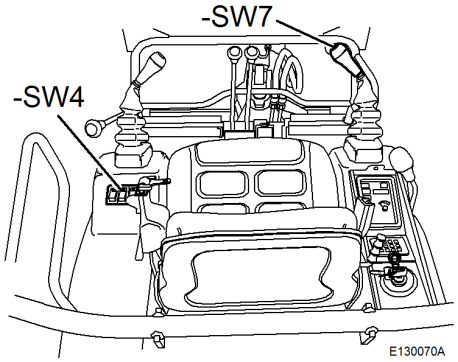

Figure 1

- **SW4**Switch, flashing beacon

- **SW7**Switch, warning horn

Warning horn/flashing beacon

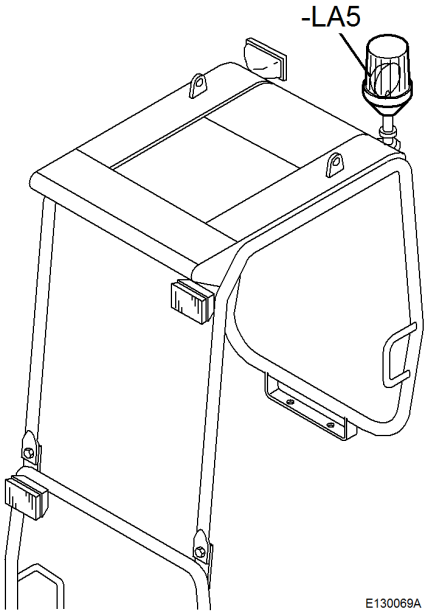

Figure 2

- **LA5**Flashing beacon

Flashing beacon

Fuses

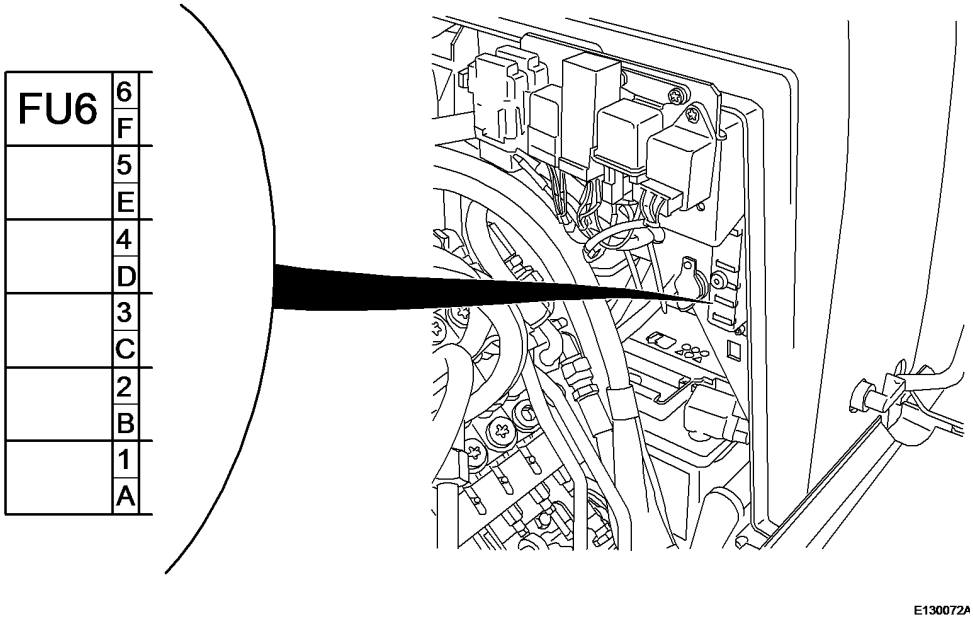

Figure 3

- **FU6/15 A** Fuse for main signal horn, service plug, car radio memory, flashing beacon, optional immobilizer

Document Title:	Function Group:	Information Type:	Date:
Wiring diagram, external warning system	**362**	**Service Information**	**2014/4/2 0**
Profile:			

Wiring diagram, external warning system

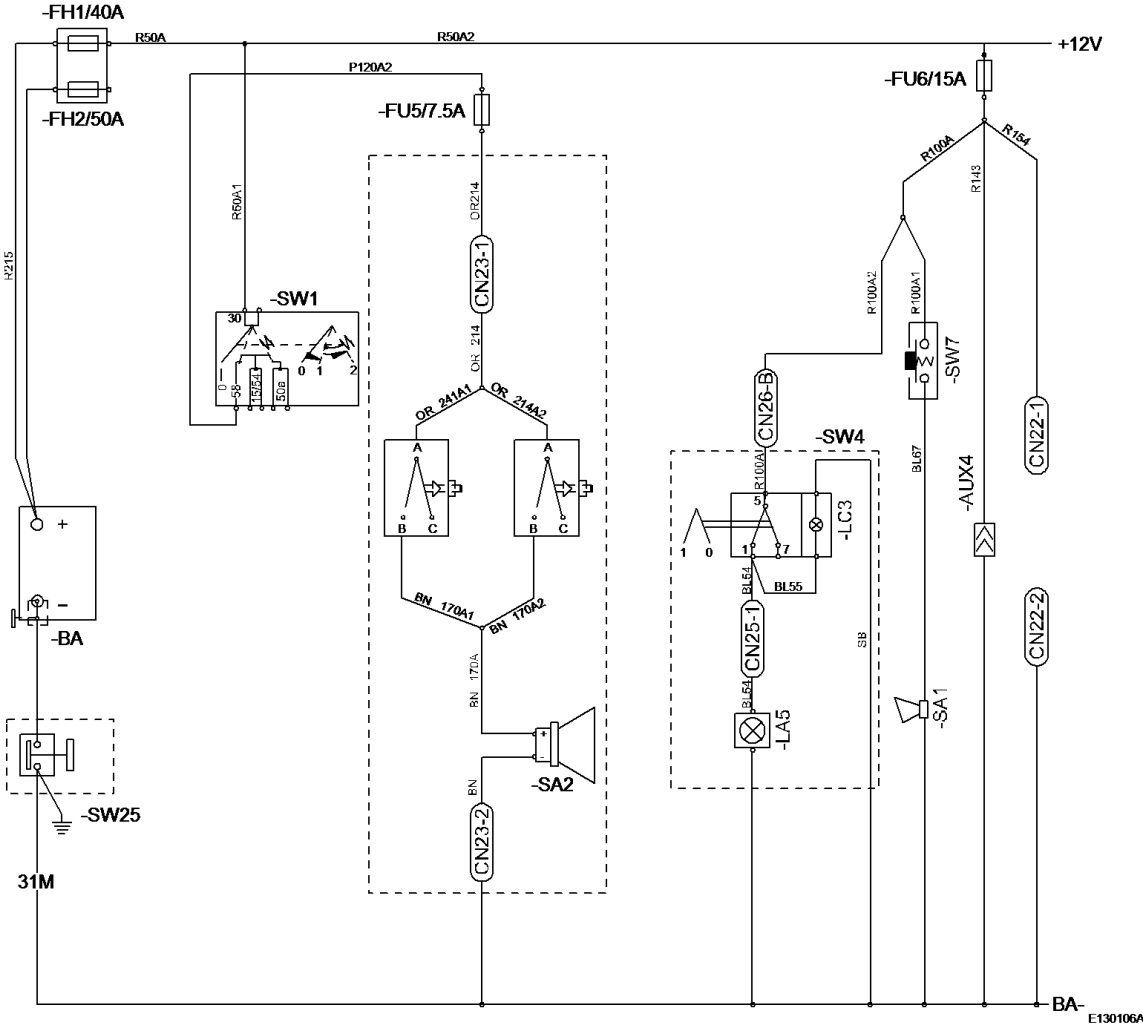

Figure 1

- LA5	Flashing beacon
- SA1	Warning buzzer, main signal
- SA2	Warning buzzer, travel system

VOLVO
Construction Equipment

Service Information

Document Title:	Function Group:	Information Type:	Date:
Main wiring loom/main plug connector roll over protection structure	**371**	**Service Information**	**2014/4/2 0**
Profile:			

Main wiring loom/main plug connector roll over protection structure

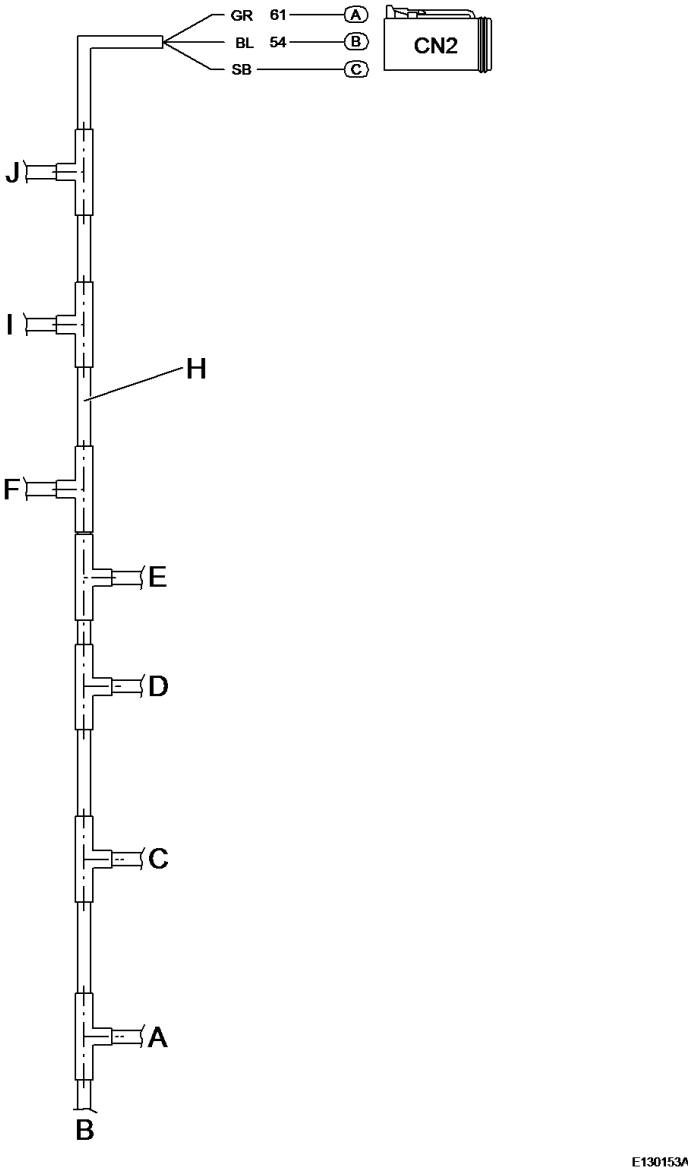

Figure 1

A	Wiring loom for engine	**D**	Wiring loom relay	**H**	Main wiring loom
B	Wiring loom, left hand console	**E**	Wiring loom for engine	**I**	Wiring loom for solenoid valves **-MA3,** boom-mounted headlights **-LA1**, warning horn **-SA1**
C	Connection **-MA2-MA4**	**F**	Wiring loom for fuse box	**CN 2**	Main plug connector for roll over protection structure

Fuse box

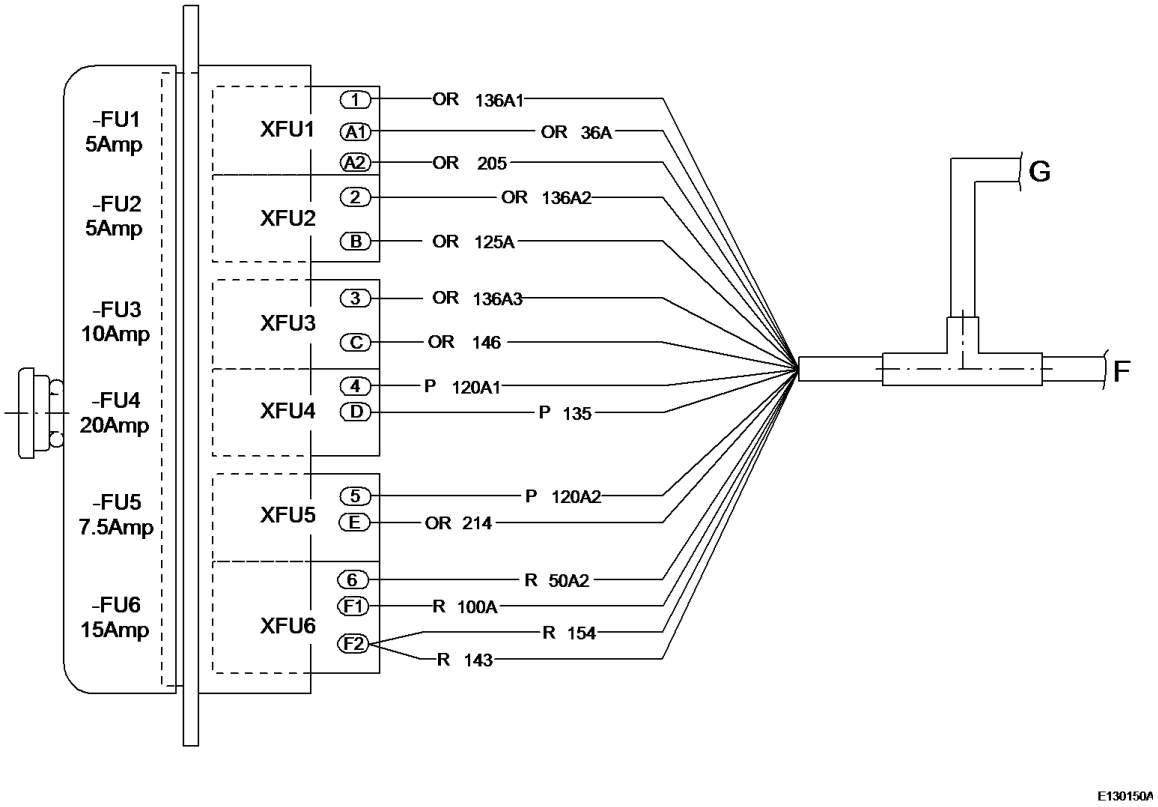

Figure 2

F	To main wiring loom point **F**
G	To wiring loom for left hand console, point **G**

Document Title:	Function Group:	Information Type:	Date:
Wiring looms	**371**	**Service Information**	**2014/4/2 0**
Profile:			

Wiring looms

Engine

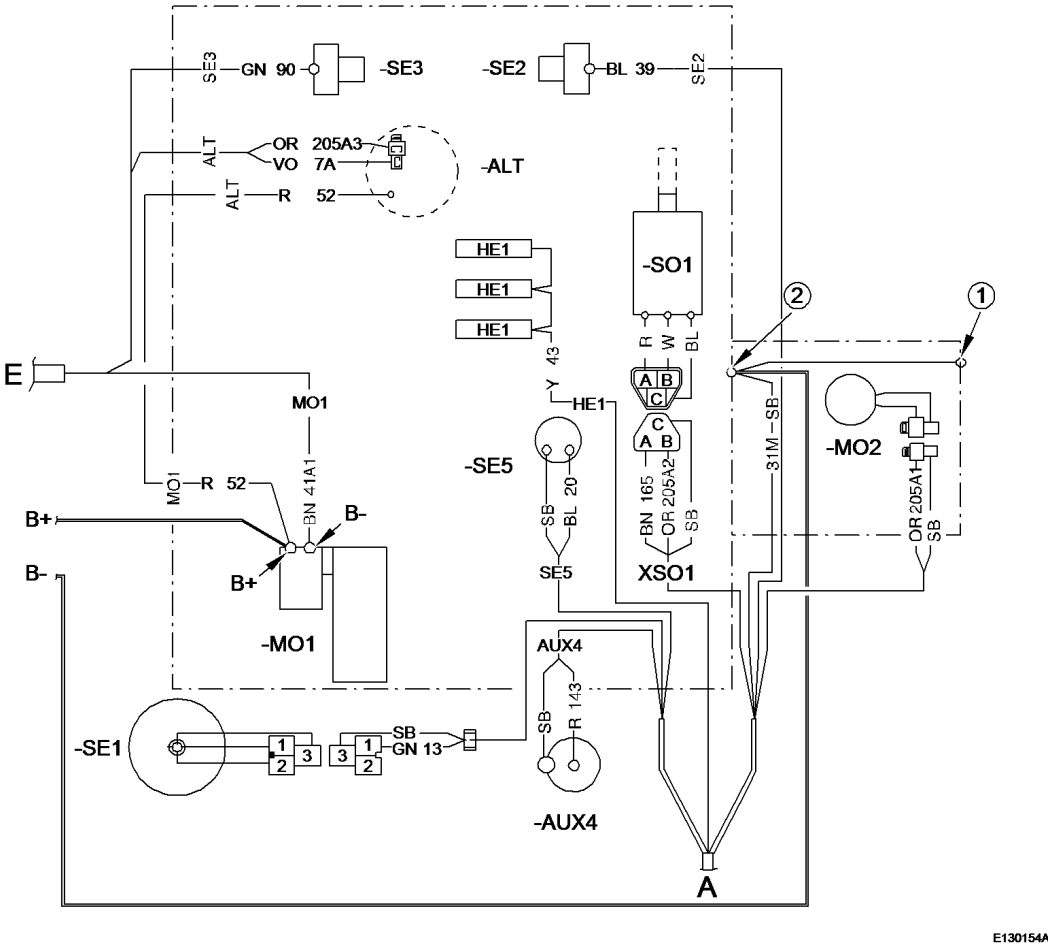

Figure 1

1	Ground connection, chassis
2	Ground connection, engine block
A	To main wiring loom point **A**
E	To main wiring loom point **E**

Relay group

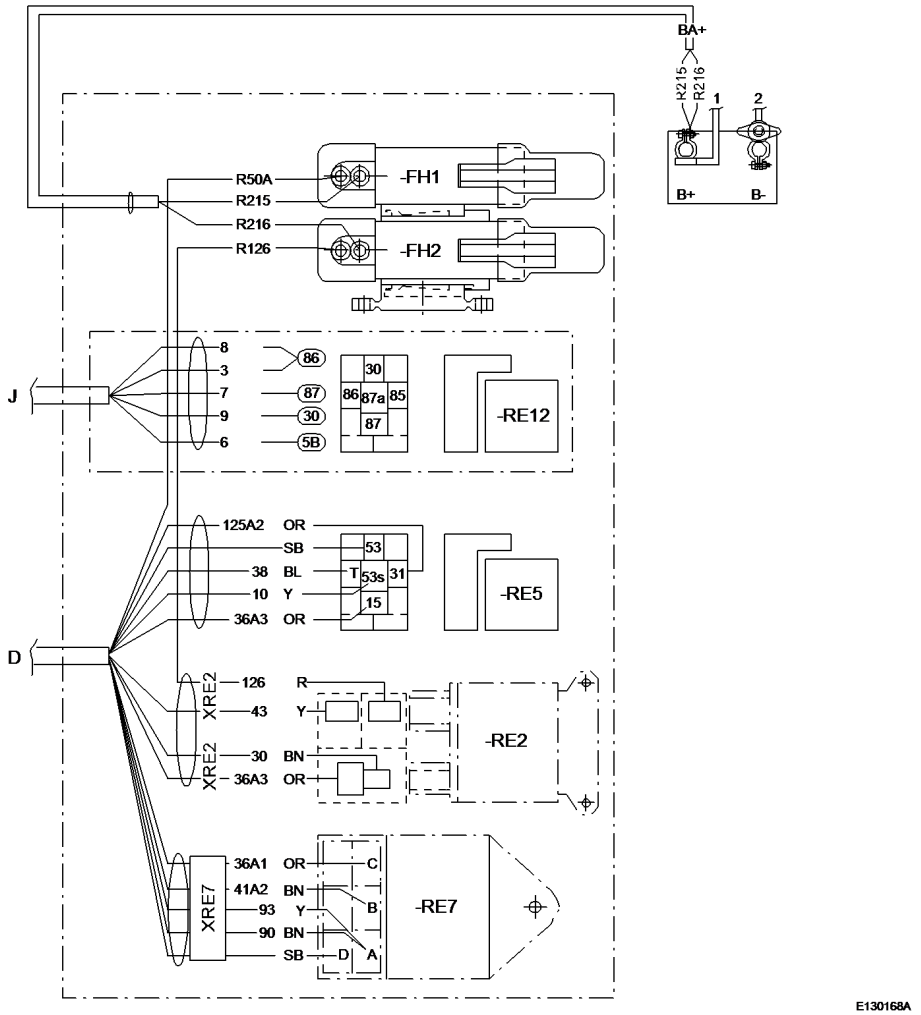

Figure 2

1	To starter, terminal R+
2	To ground connection on engine block, point **B**
D	To main wiring loom point **D**
G	To wiring loom for fuse box, point **G**
J	To wiring loom for immobilizer, point **J**

Engine, hydraulic system side

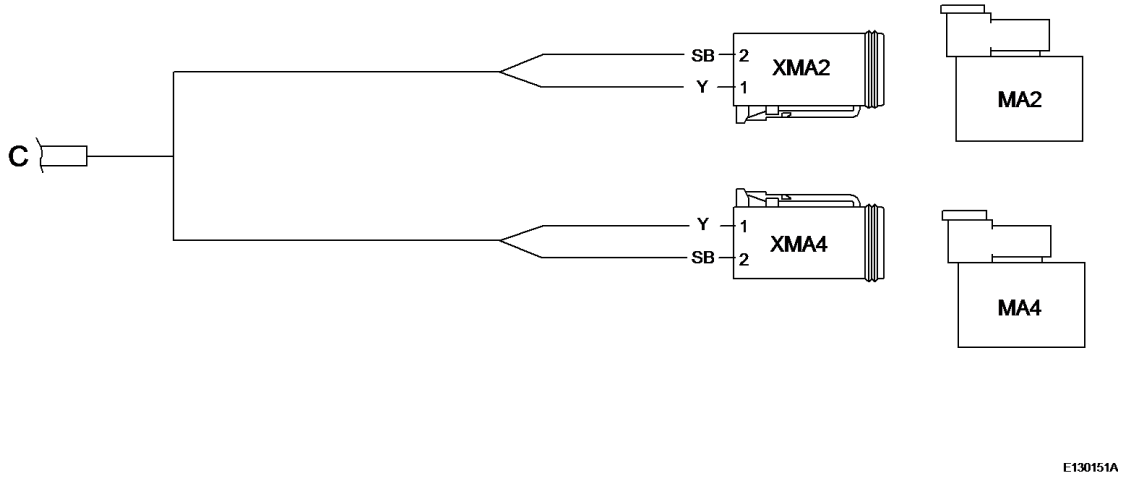

Figure 3

C	To main wiring loom point **C**
- MA2	2-speeds solenoid valve
- MA4	Solenoid valve, variable track

Solenoid valve, slewing/offsetting
Headlights, boom Warning horn

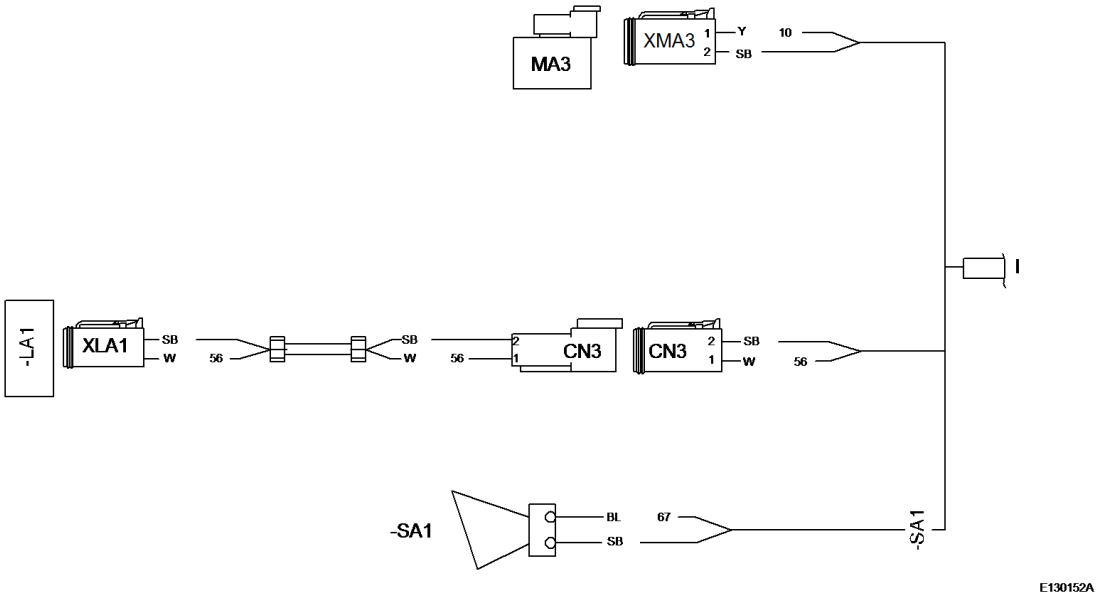

Figure 4

I	To main wiring loom point **I**

Console, left

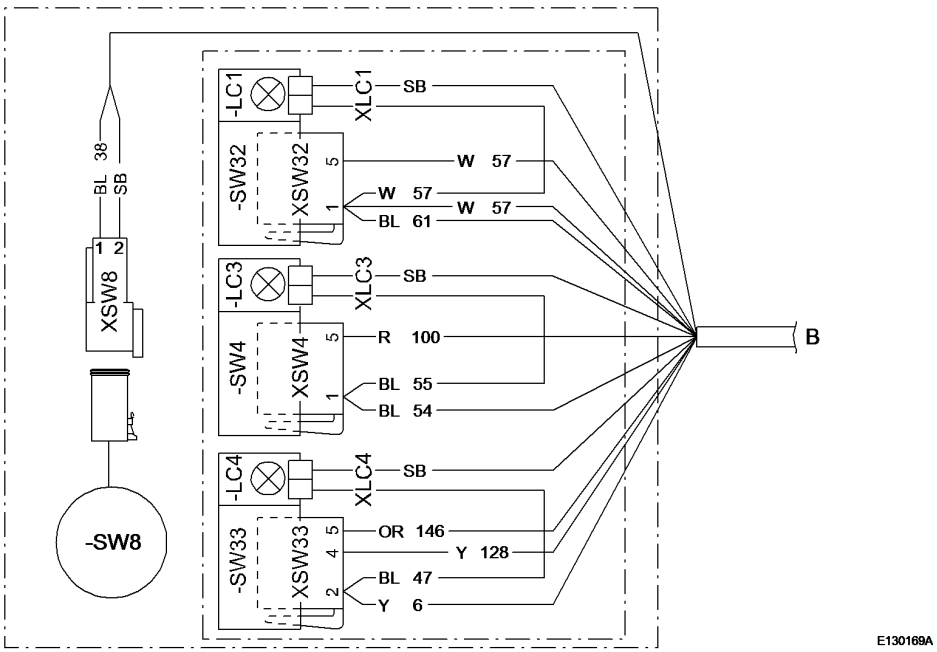

Figure 5

B To main wiring loom point **B**

Console, right

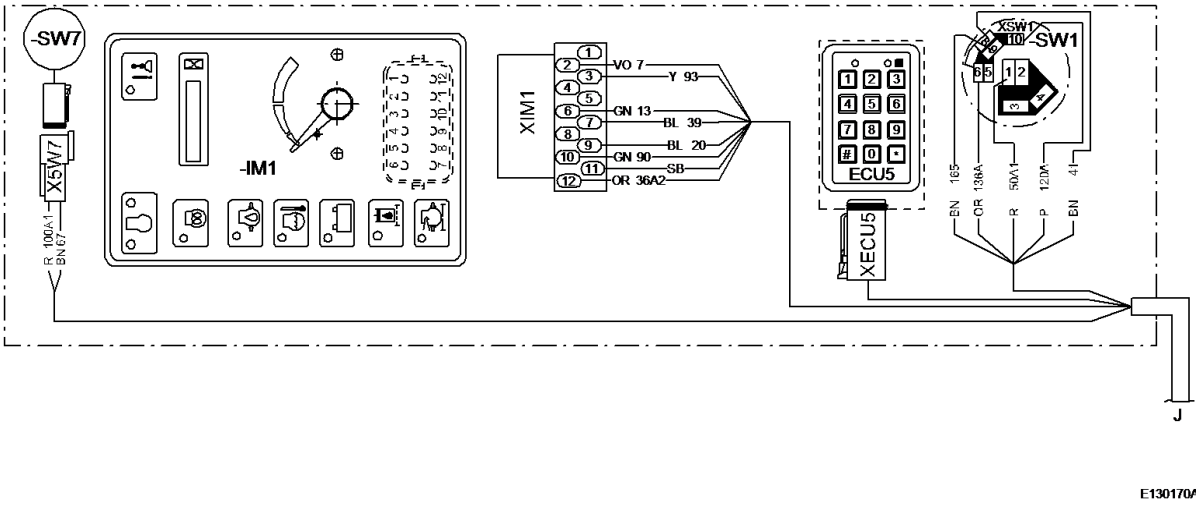

Figure 6

J To main wiring loom point **I**

VOLVO
Construction Equipment

Service Information

Document Title: **Fuses for machine equipment**	Function Group: **372**	Information Type: **Service Information**	Date: **2014/4/2 0**
Profile:			

Fuses for machine equipment

ECU

Fuses

The batteries are located under the driver"s seat, on the left hand side.

WARNING

Use only fuses of specified capacity (amperage).
Danger of damage or fire in the electrical system!

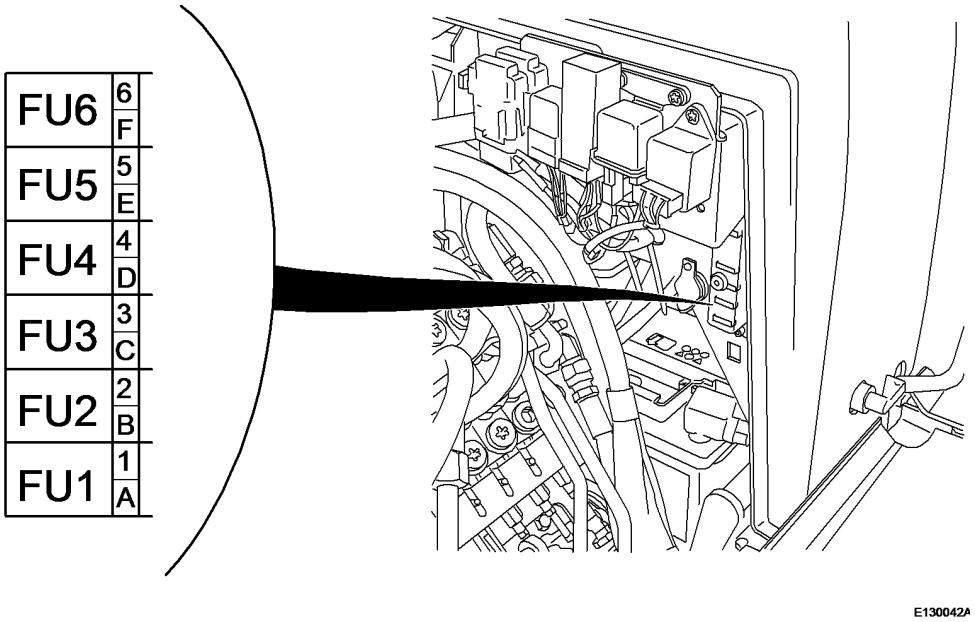

Figure 1

FU1	5 A-fuse	Engine, dashboard, optional immobilizer
FU2	5 A-fuse	Slewing/offset, hydraulic support, safe starting
FU3	10 A-fuse	2-speed, optional unlocking of attachments, variable track, accessories
FU4	20 A-fuse	Lighting
FU5	7,5 A-fuse	Cabin and optional travel alarm system
FU6	15 A-fuse	Main signal horn, service plug, car radio memory, optional flashing beacon, immobilizer

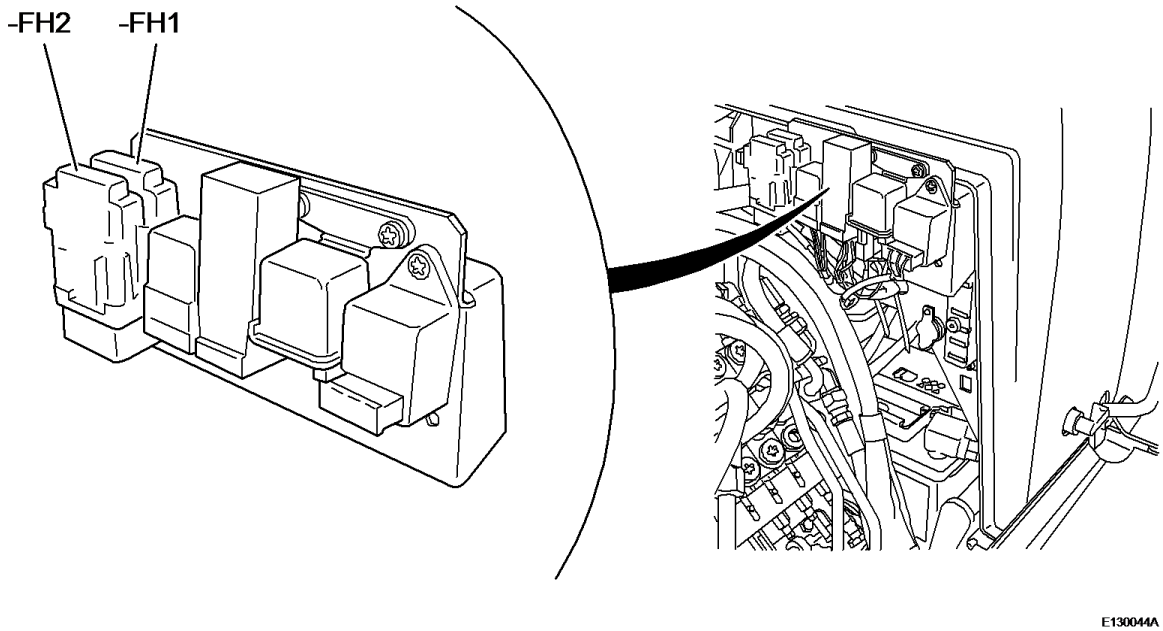

Figure 2

FH1	40 A slow	Main fuse (master)
FH2	50 A	Fuse, pre-heating plugs

Document Title:	Function Group:	Information Type:	Date:
Relay/ECU	**372**	**Service Information**	**2014/4/2 0**
Profile:			

Relay/ECU

The relays are located under the driver"s seat, on the left hand side.

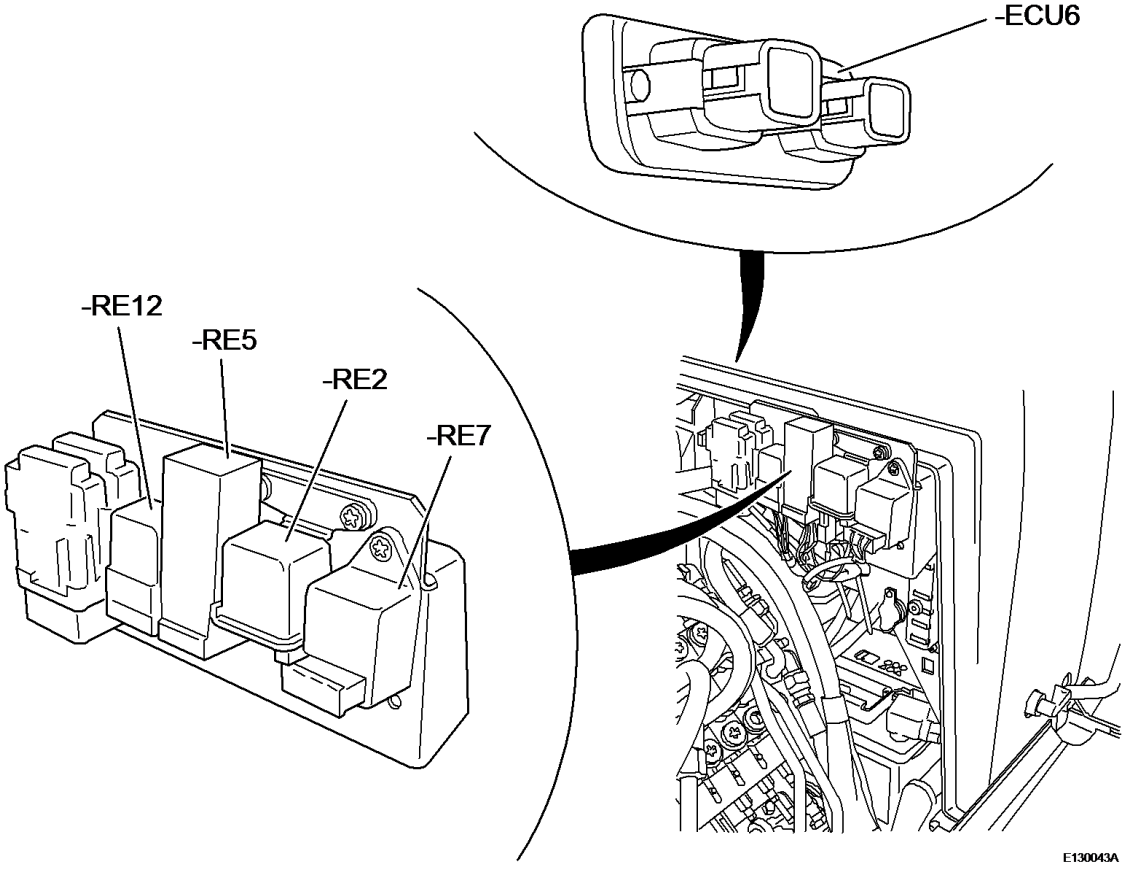

Figure 1

ECU6	Relay	Control unit for digital immobilizer
RE2	Relay	Pre-heating of engine
RE5	Relay	Slewing/offsetting
RE7	Relay	Pre-heating delay
RE12	Relay	Digital immobilizer

Document Title:	Function Group:	Information Type:	Date:
Electrical components (hydraulic system side)	**380**	**Service Information**	**2014/4/2 0**
Profile:			

Electrical components (hydraulic system side)

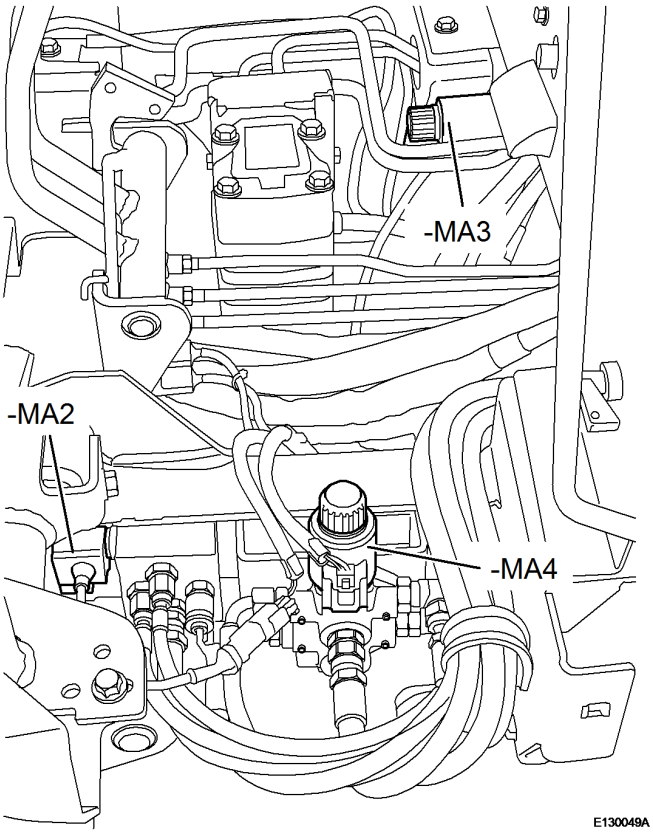

Figure 1

- MA2	2-speeds solenoid valve
- MA3	Solenoid valve, slewing/offsetting
- SE4	Solenoid valve, variable track

The solenoid valves are located in front of the operator’s stand under the floor plate.

Document Title:	Function Group:	Information Type:	Date:
Electrical components (machine side)	**386**	**Service Information**	**2014/4/2 0**
Profile:			

Electrical components (machine side)

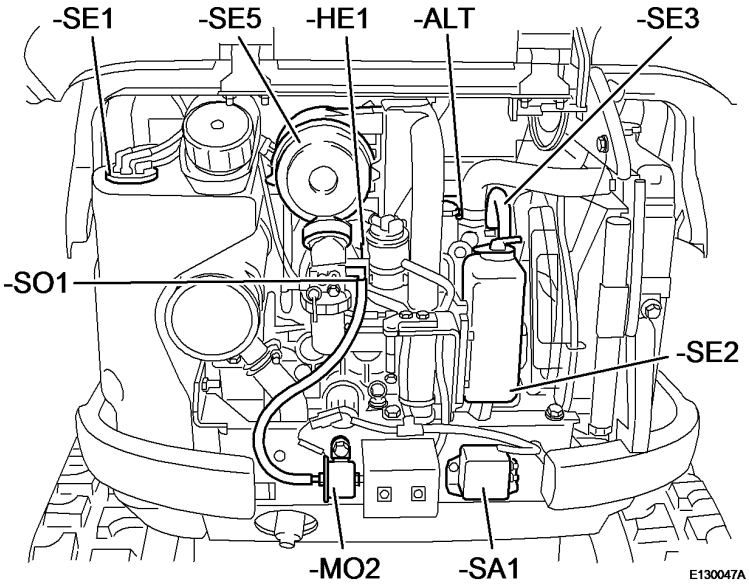

Figure 1

- ALT	Generator		**- SE1**	Transducer	Fuel
- HE1	Glow plugs		**- SE2**	Transducer	Engine oil pressure
- MO2	Fuel pump		**- SE3**	Transducer	Coolant
- SA1	Warning buzzer		**- SE5**	Transducer	Air filter
			- SO1	Magnet	Engine shut down

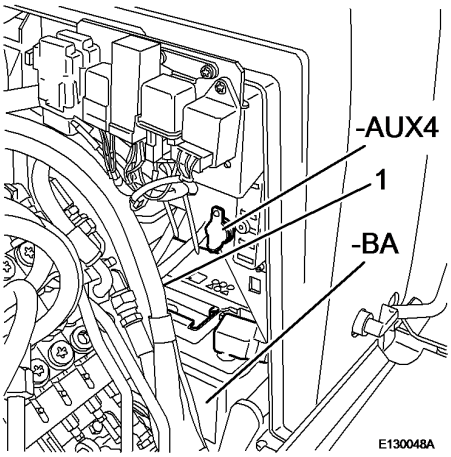

Figure 2

1 Battery disconnect terminal (screw clamp)

- BA Battery

- AUX4 Socket

Transducer

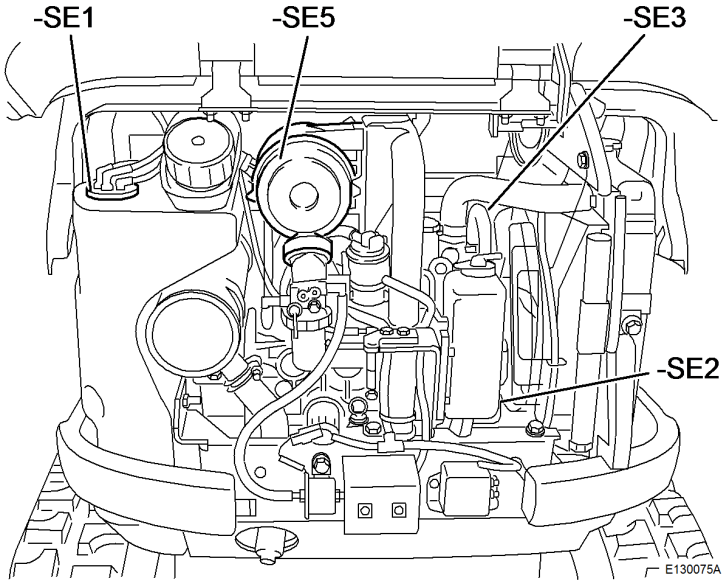

Figure 3

- SE1	Sensor, fuel tank
- SE2	Engine oil pressure sensor
- SE3	Coolant sensor
- SE5	Sensor for air filter

Fuses

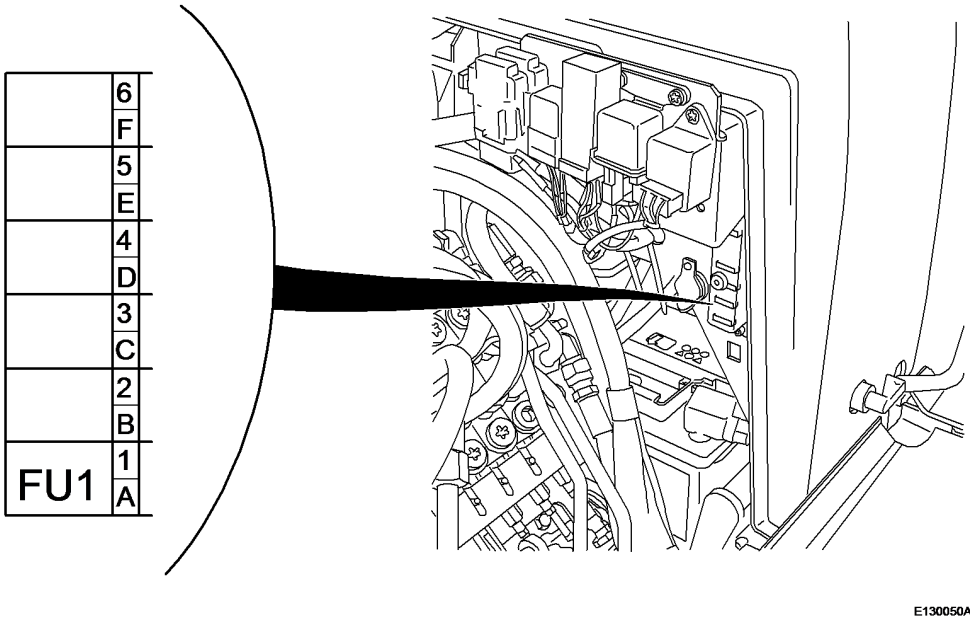

Figure 4

- **FU1/5 A** Fuse for engine, dashboard, optional immobilizer

VOLVO

Construction Equipment

Service Information

Document Title:	Function Group:	Information Type:	Date:
Wiring diagram for sensor, control/warning system	**386**	**Service Information**	**2014/4/2 0**
Profile:			

Wiring diagram for sensor, control/warning system

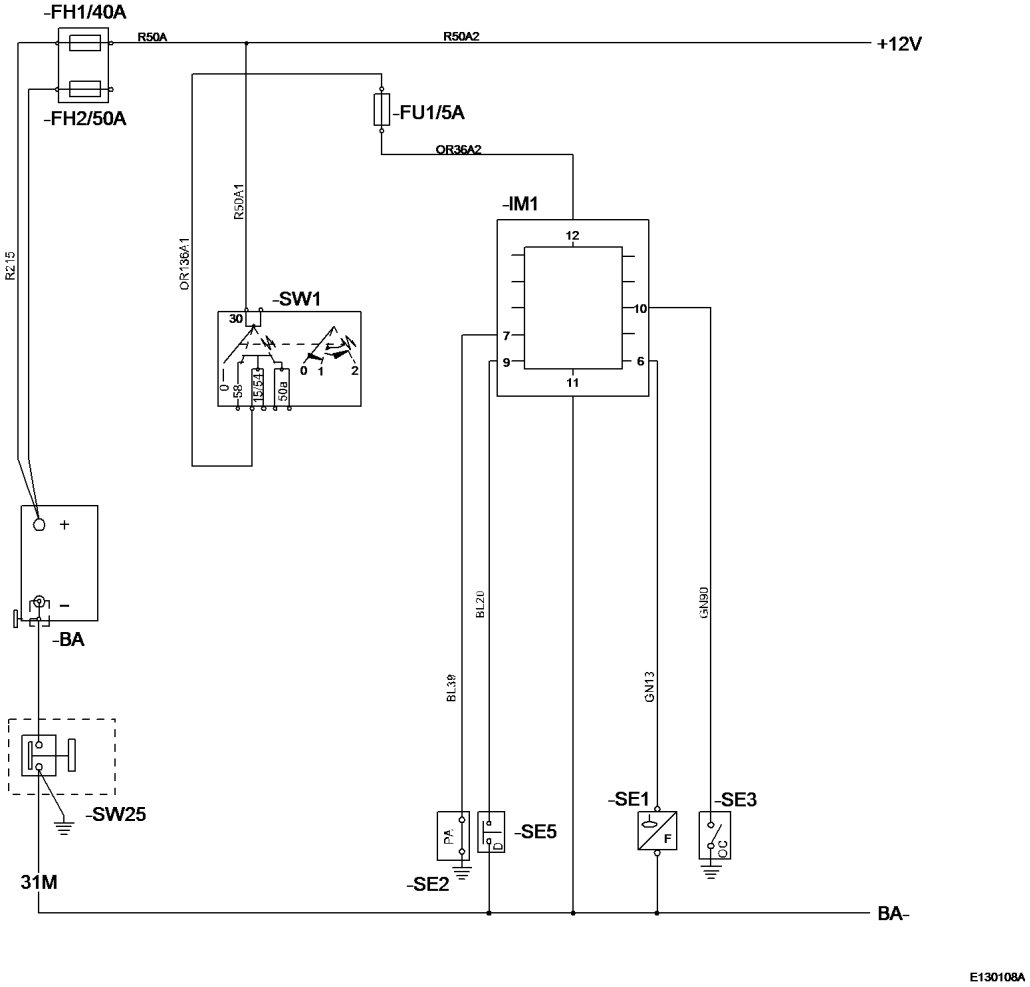

Figure 1

- SE1	Sensor, fuel level
- SE2	Engine oil pressure sensor
- SE3	Sensor for coolant thermo switch
- SE4	Sensor, contamination of oil filter

Sensor, control/warning system

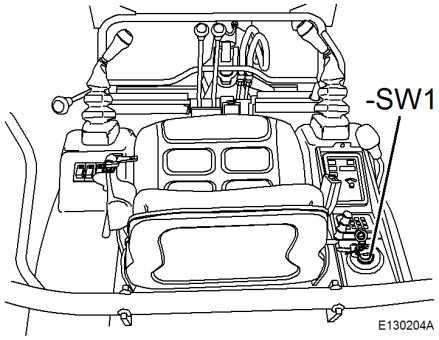

Figure 2

- SW1 Ignition switch

Document Title:	Function Group:	Information Type:	Date:
Overview	**387**	**Service Information**	**2014/4/2 0**
Profile:			

Overview

Dashboard (- IM1)

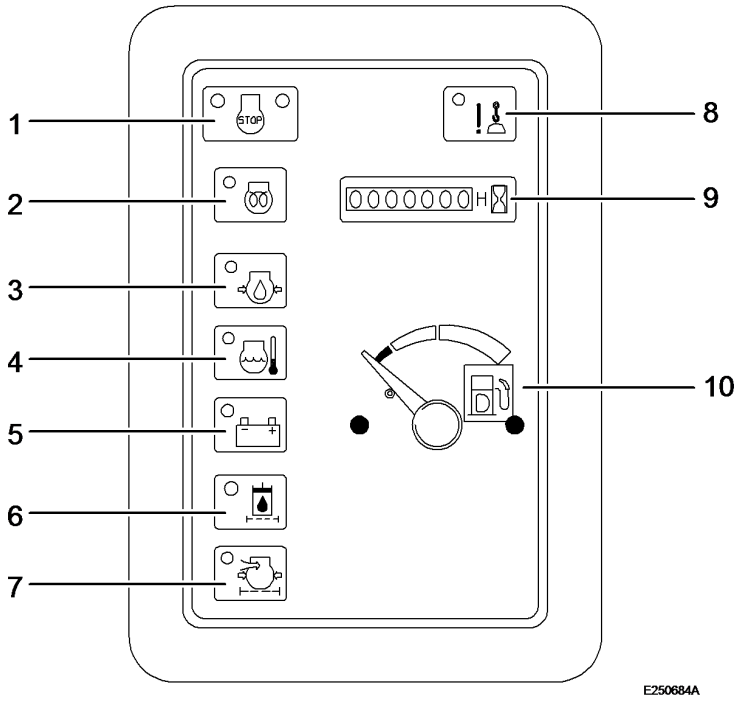

Figure 1

1. Engine OFF
2. Preheating
3. Engine oil pressure
4. Coolant temperature
5. Battery charge condition gauge
6. Oil filter, hydraulics (N.C.)
7. Air filter
8. Warning, overload boom (option) (N.C.)
9. Operating hour meter
10. Tank filling level gauge

Connection assignment for dashboard (- IM1)

1 N.C.
2 Battery charge condition gauge
3 Preheating
6 Tank filling level gauge
7 Engine oil pressure
8 Engine OFF
9 Air filter

10 Coolant temperature

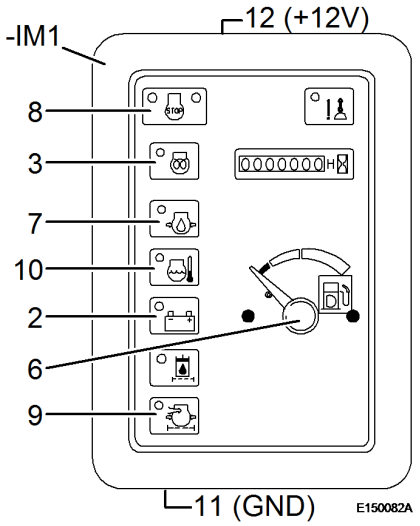

Figure 2

- IM1 Dashboard

Fuses

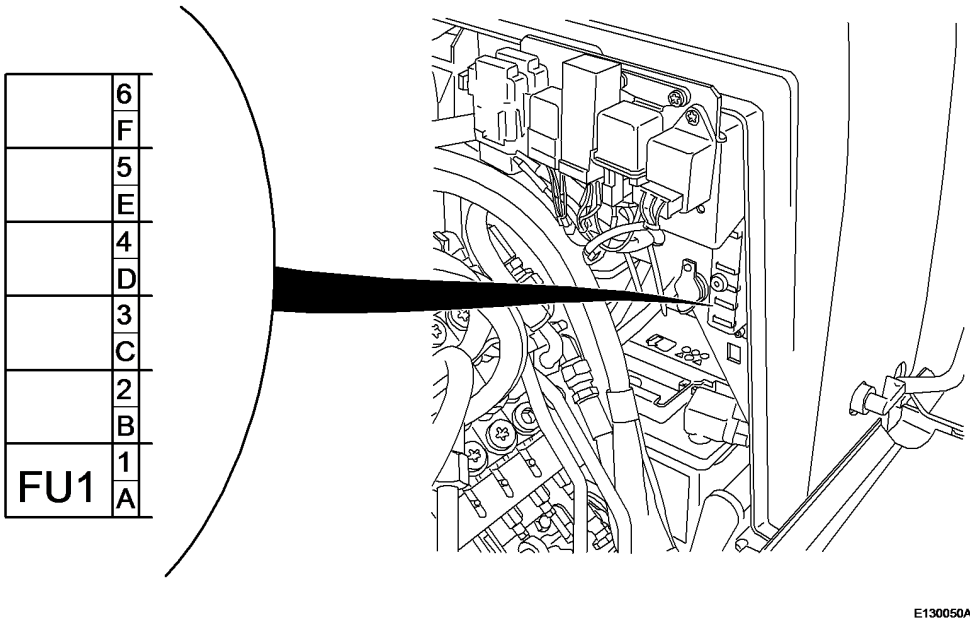

Figure 3

FU1/5 A Engine, dashboard, optional immobilizer

VOLVO
Construction Equipment

Service Information

Document Title:	Function Group:	Information Type:	Date:
Wiring diagram for dashboard	**387**	**Service Information**	**2014/4/2 0**
Profile:			

Wiring diagram for dashboard

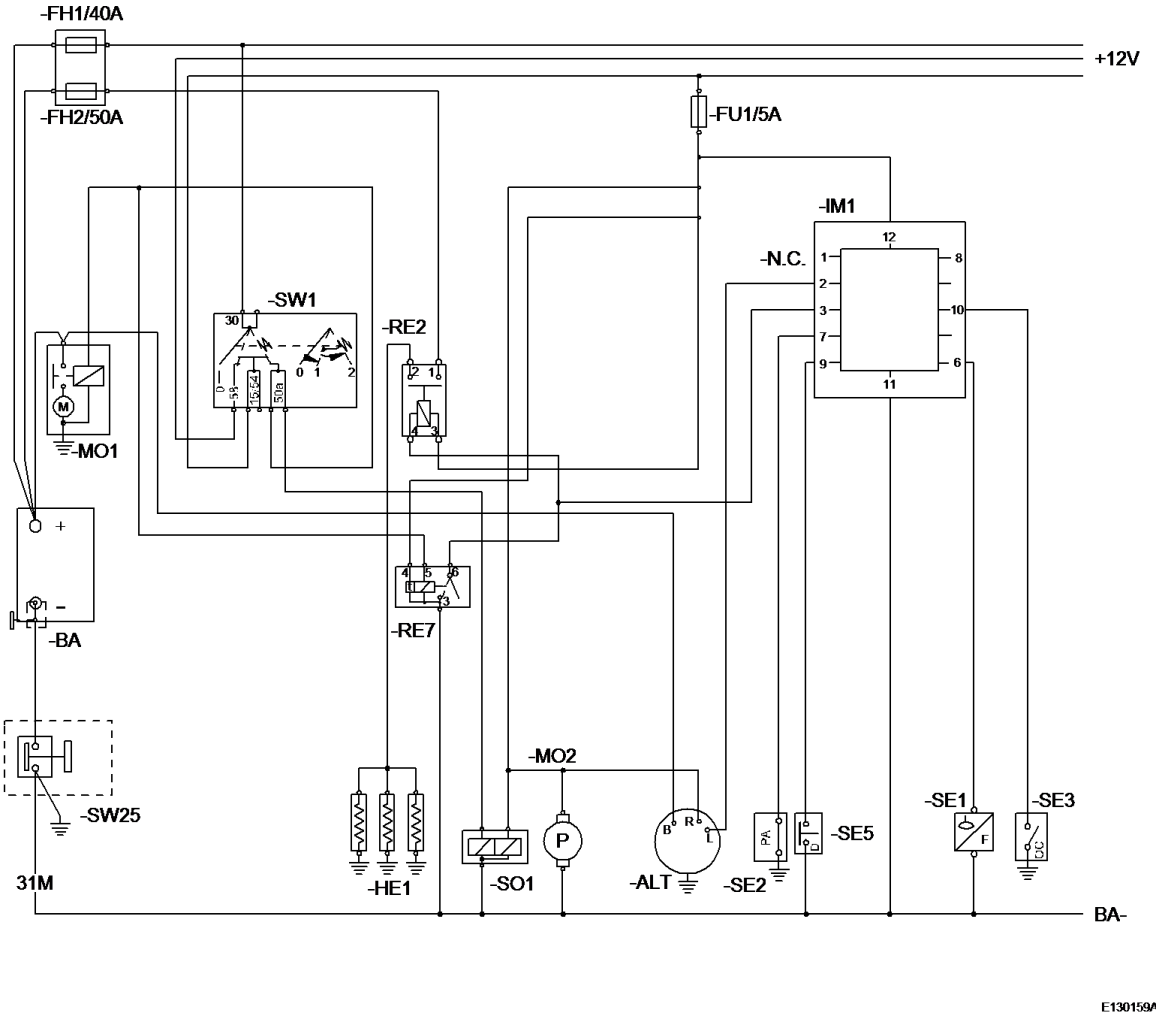

Figure 1

- IM1	Control switch

Many thanks for your purchase.
Happy every day.

VOLVO
Construction Equipment

Service Information

Document Title:	Function Group:	Information Type:	Date:
General notes to be observe when working on power transmission assemblies	**400**	**Service Information**	**2014/4/3 0**
Profile:			

General notes to be observe when working on power transmission assemblies

All work to be performed should be executed with greatest care and conscientiousness!

The safety regulations must be observed and strictly applied!

Any regulations of the responsible liability association must be followed.

WARNING

Before starting work on power transmission components the machine must be parked on level ground of sufficient load bearing capacity, secured against rolling away and the engine is to be shut down.

The complete system must be relieved from any pressure and the battery must be disconnected.

If running of the engine and a connected battery is required for certain test procedures, special precautions must be taken to rule out dangers for persons.

CAUTION

When removing and installing parts to be replaced or repaired strict cleanliness is the most important prerequisite.

Make sure that no dirt and other contaminating substances can enter into the system.

- Clean fittings, filler caps and their immediate surrounding area so that no dirt can fall in.
- Before disconnecting any hoses, pipes or similar shut down the engine and relieve the pressure in the system.
- Before starting repair work close all ports and openings with clean plugs or caps and do not forget to remove plugs and caps before installation.
- Use only lint-free cloths to wipe out and clean hydraulic components.
- When filling up the hydraulic oil tank the oil must generally be passed through the filter, because even new oil from closed oil drums does not fulfilled the requirements demanded from a clean hydraulic oil.
- When assembling hydraulic parts grease must **not** be used as a sliding agent, use hydraulic oil instead.
- If metal chips and abrasion residuals are found in the hydraulic oil tank all hydraulic circuits must be thoroughly flushed and cleaned.

Repairs must generally be carried out with **genuine spare parts**.

Before disassembling marks all parts as a measure to help during later reassembly.

Generally use new seals when reassembling. Self-locking nuts must generally be replaced.

Perform all repair work only by using suitable tools and perform adjustments generally with the help of specified measuring equipment.

When installing new components the adjustments must be generally checked, i.e. diesel engine and new components must be adapted to each other.

- Check pressures and rotational speeds.
- Check fittings and flanges for leaks.
- Watch the oil level in the hydraulic oil tank, if necessary top up hydraulic oil.

⚠ CAUTION

Use only hydraulic oil as specified in the table of fuels and lubricants in the operating instructions.

Document Title:	Function Group:	Information Type:	Date:
Fuels, lubricants and filling capacities (litres)	**440**	**Service Information**	**2014/4/3 0**
Profile:			

Fuels, lubricants and filling capacities (litres)

Only fuels and lubricants complying with the listed specifications may be used.

Lubrication chart, unit: Litres

Tank	**Fluid**	**Ambient temperature**									
		-22 -30	-4 -20	14 -10	32 0	50 10	68 20	86 30	104 40	122 °F 50 °C	Filling capacity
Hydraulic oil tank	Hydraulic oil	**ISO-VG 32**									23 l
		*		**ISO-VG 46**							
						ISO-VG 68					
Chain gear, left	Gear oil	**SAE 80W-90 and API or GL5 (with limited-slip additive)**									0.33 l
Chain gear right											0.33 l
Live ring	Grease	*									
		MULTI-PURPOSE #2									-

NOTE!

*: ex works

SAE: Society of Automotive Engineers
ISO: International Standardization Organization
API: American Petroleum Institute

VOLVO
Construction Equipment

Service Information

Document Title:	Function Group:	Information Type:	Date:
General notes to be observe when working on power transmission assemblies	**440**	**Service Information**	**2014/4/3 0**
Profile:			

General notes to be observe when working on power transmission assemblies

WARNING

Precautions against possible dangers of accident, injury or danger to life.

NOTE!
Special notes to improve operating, inspection and adjustment procedures as well as service work.

- trained personnel
- specified tools and testing equipment, such as test stand, flaw tester, special tools
- genuine spare parts

All work to be performed should be executed with greatest care and conscientiousness!

The safety regulations must be observed and strictly applied!

Any regulations of the responsible liability association must be followed.

WARNING

Before starting work on power transmission components the machine must be parked on level ground of sufficient load bearing capacity, secured against rolling away and the engine is to be shut down.

The complete system must be relieved from any pressure and the battery must be disconnected.

If running of the engine and a connected battery is required for certain test procedures, special precautions must be taken to rule out dangers for persons.

The most important prerequisite is strict cleanliness when removing and installing parts to be replaced or repaired.

Make sure that no dirt and other contaminating substances can enter into the system.

- Clean fittings, filler caps and their immediate surrounding area so that no dirt can fall in.
- Before disconnecting any hoses, pipes or similar shut down the engine and relieve the pressure in the system.
- Before starting repair work close all ports and openings with clean plugs or caps and do not forget to remove plugs and caps before installation.
- Use only lint-free cloths to wipe out and clean hydraulic components.
- When filling up the hydraulic oil tank the oil must generally be passed through the filter, because even new oil from closed oil drums does not fulfilled the requirements demanded from a clean hydraulic oil.
- When assembling hydraulic parts grease must **not** be used as a sliding agent, use hydraulic oil instead.
- If metal chips and abrasion residuals are found in the hydraulic oil tank all hydraulic circuits must be thoroughly flushed and cleaned.

Repairs must generally be carried out with **genuine spare parts**.

Before disassembling marks all parts as a measure to help during later reassembly.

Generally use new seals when reassembling. Self-locking nuts must generally be replaced.

Perform all repair work only by using suitable tools and perform adjustments generally with the help of specified measuring equipment.

When installing new components the adjustments must be generally checked, i.e. diesel engine and new components must be adapted to each other.

- Check pressures and rotational speeds.
- Check fittings and flanges for leaks.
- Watch the oil level in the hydraulic oil tank, if necessary top up hydraulic oil.

NOTE!
The wheel motors contain parts that have been pressed in. These parts can normally not be disassembled and should not be removed with force.

WARNING

Use only oil as specified in the table of fuels and lubricants in the operating instructions.

Document Title:	Function Group:	Information Type:	Date:
Hydraulic motor 1 - travel system	**440**	**Service Information**	**2014/4/3 0**
Profile:			

Hydraulic motor 1 - travel system

Tightening torque	**Nm**
Plug - spool	46...51
Plug control element	12...23
Socket head cap screw - housing	51...65

Document Title:	Function Group:	Information Type:	Date:
Hydraulic motor, slewing	**440**	**Service Information**	**2014/4/3 0**
Profile:			

Hydraulic motor, slewing

Gear motor - technical data

Slewing system	
Speed of slewing movement	10 rev./min

Gear motor - tightening torques

Tightening torque	**Nm**
Screw - gear motor	85 ± 18
Screw - balancing valve	48 ± 10
Hydraulic line	48 ± 10

Document Title:	Function Group:	Information Type:	Date:
Mechanical transmission - track gearbox	**440**	**Service Information**	**2014/4/3 0**
Profile:			

Mechanical transmission - track gearbox

Tightening torque	**Nm**
Plug on cover	46...51
Plug on cover	12...13

Document Title:	Function Group:	Information Type:	Date:
Plugs with tapered thread	**440**	**Service Information**	**2014/4/3 0**
Profile:			

Plugs with tapered thread

Size	**For aluminium alloys** **Nm**	**For ferrous metals** **Nm**
NPTF 1/16	6,4 ± 1	10 ± 2
PT 1/8	10 ± 2	18 ± 3
PT 1/8 NPTF 1/4	10 ± 2	39 ± 5
PT 3/8	-	64 ± 10

Document Title:	Function Group:	Information Type:	Date:
Strength class 8.8 Metric coarse and fine threads	**440**	**Service Information**	**2014/4/3 0**
Profile:			

Strength class 8.8 Metric coarse and fine threads

Thread	**Nm**
M6	10 ± 2
M8	24 ± 5
M10	48 ± 10
M12	85 ± 18
M14	140 ± 25
M16	220 ± 45
M20	430 ± 85
M24	740 ± 150

Document Title:	Function Group:	Information Type:	Date:
Strength class 10.9 Metric coarse and fine threads	**440**	**Service Information**	**2014/4/3 0**
Profile:			

Strength class 10.9 Metric coarse and fine threads

Thread	**Nm**
M6	12 ± 2
M8	30 ± 5
M10	60 ± 10
M12	105 ± 20
M14	175 ± 30
M16	275 ± 45
M20	540 ± 90
M24	805 ± 160

Document Title:	Function Group:	Information Type:	Date:
Technical data	**440**	**Service Information**	**2014/4/3 0**
Profile:			

Technical data

Volvo standard tightening torques

The tightening torques in the following tables apply for screw connections of the corresponding strength class.
If not specified differently, the tables are to be considered as general instructions for the tightening of screw connections.

NOTE!

For flange bolts of type U6FS the values must be increased by 10%. Screws and nuts must be clean and oiled.

Document Title:	Function Group:	Information Type:	Date:
UNC-threads, coarse pitch	**440**	**Service Information**	**2014/4/3 0**
Profile:			

UNC-threads, coarse pitch

Thread	**Nm**
1/4""	9 ± 2
5/16""	18 ± 4
3/8""	33 ± 8
7/16""	54 ± 14
1/2""	80 ± 20
9/16""	120 ± 30
5/8""	170 ± 40
3/4""	300 ± 70
7/8""	485 ± 115
1""	725 ± 175

Document Title: **Specification**	Function Group: **440**	Information Type: **Service Information**	Date: **2014/4/3 0**
Profile:			

Specification

Hydraulic circuit

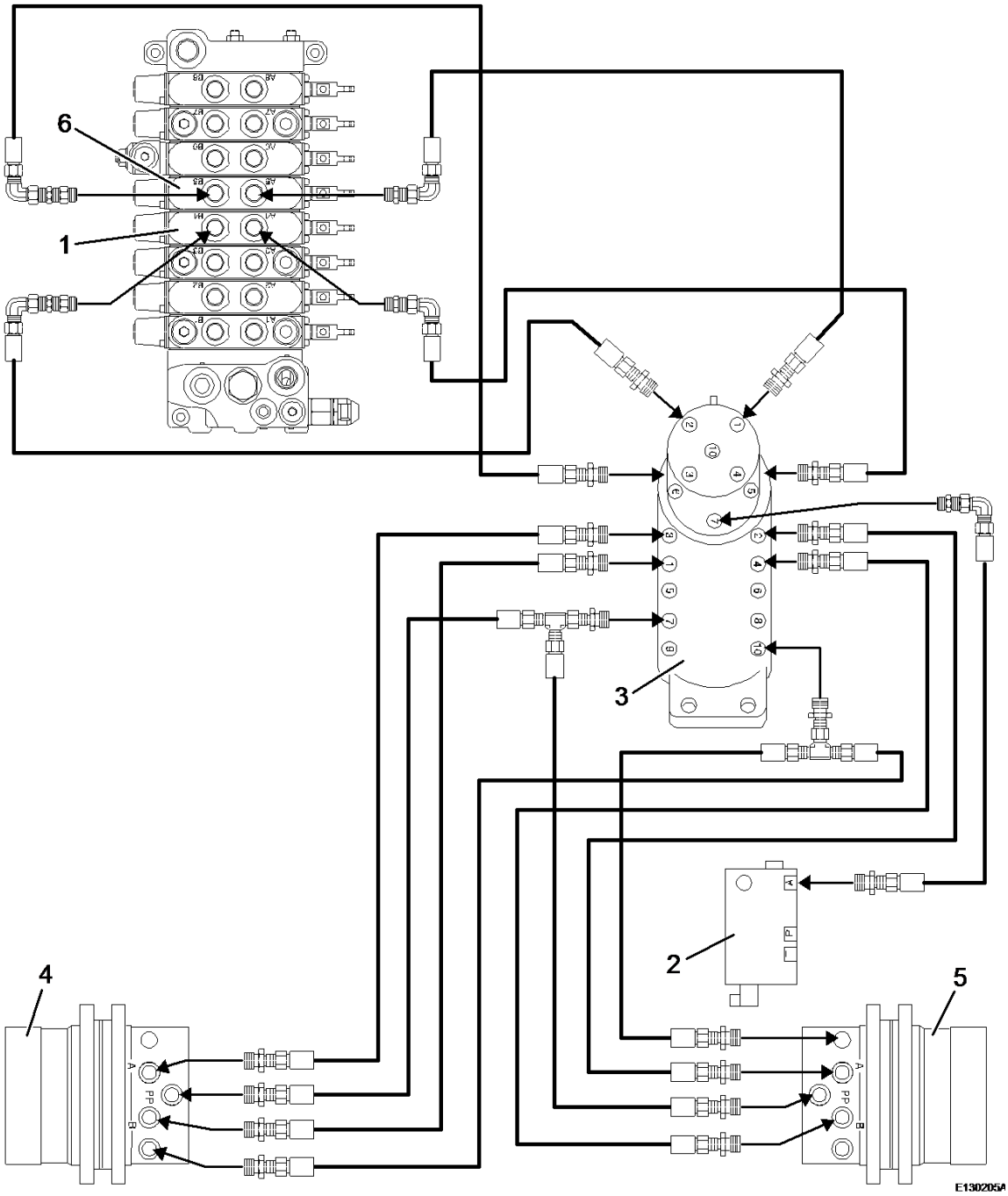

Figure 1

1. Control block element: Left hand travel control

2. Power unit (servo control)
3. Rotary oil distributor
4. Travel gear motor, right hand side
5. Travel gear motor, left hand side
6. Control block element: Right hand travel control

Document Title:	Function Group:	Information Type:	Date:
<emph>Travel motor</emph>	**441**	**Service Information**	**2014/4/3 0**
Profile:			

The hydraulic motor in this machine is an axial piston motor.

The shock valves protect both motor and circuit against pressure peaks by maintaining the start-up pressure/relief pressure of the hydraulic motor at a constant level.

The swash plate can be adjusted to two fixed positions: high rotary speed/low torque (high travel speed) or low rotary speed/high torque (low travel speed), in compliance with the travel speed switch and the way valve.

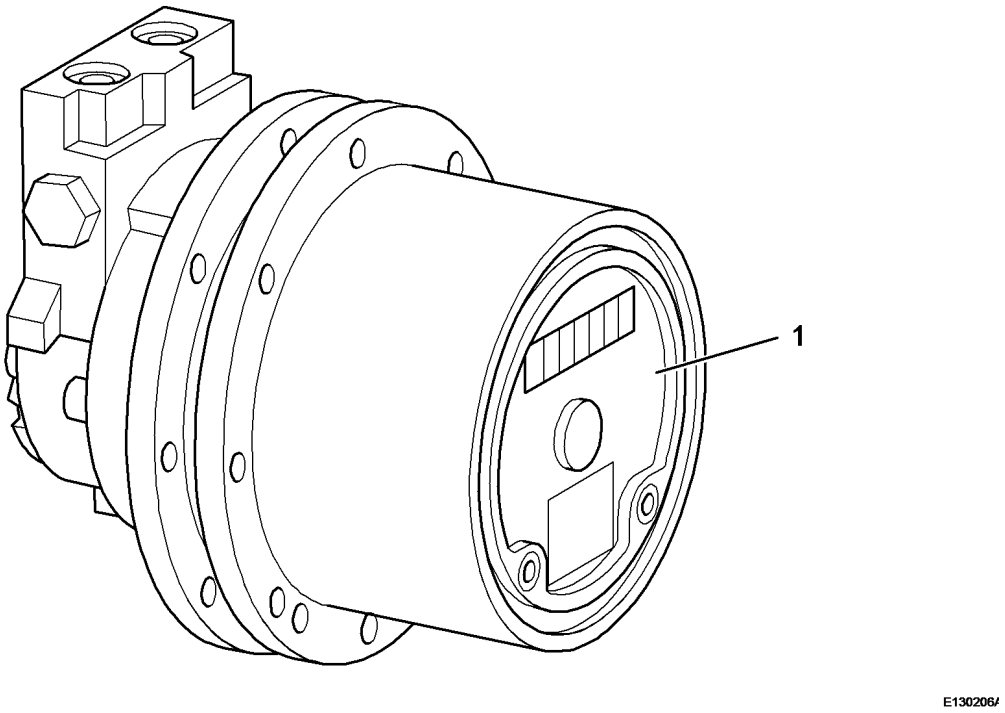

Figure 1

1. Travel motor

Document Title:	Function Group:	Information Type:	Date:
Assembling the hydraulic motor	**441**	**Service Information**	**2014/4/3 0**
Profile:			

Assembling the hydraulic motor

Op nbr

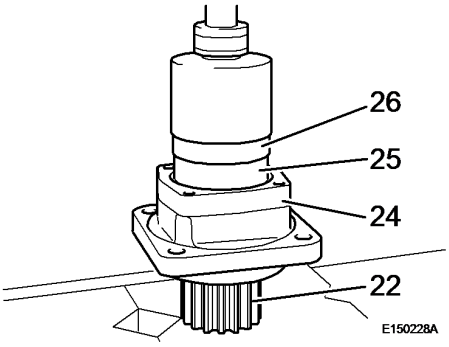

Figure 1

1. Wet the new radial seal ([Invalid linktarget] /23) with oil and insert it into the bearing housing ([Invalid linktarget] /24).

2. Press shaft with pinion (22) into the bearing housing.

3. Press both roller bearings (26) and spacer pieces (25) into the bearing housing (24) until they bottom.

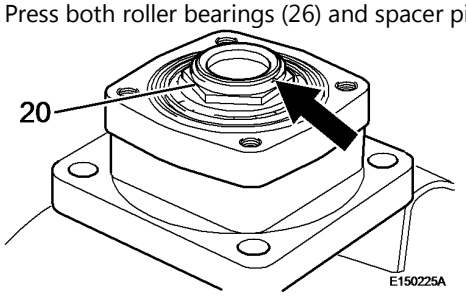

Figure 2

4. Screw on nut (20) and tighten with 100 Nm.

5. Nut on groove of shaft with pinion (arrow).

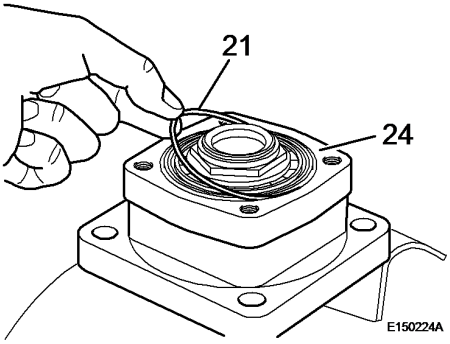

Figure 3

6. Wet O-ring (21) with oil and insert it into the bearing housing (24).

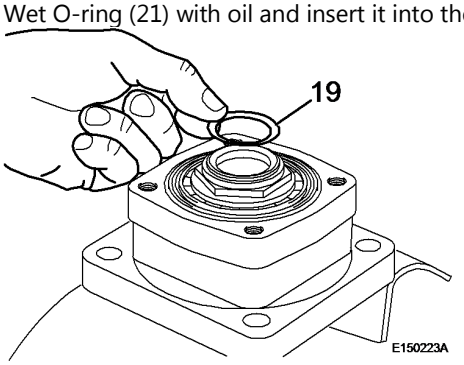

Figure 4

7. Apply the new seal ring (19) with the arched surface pointing up.

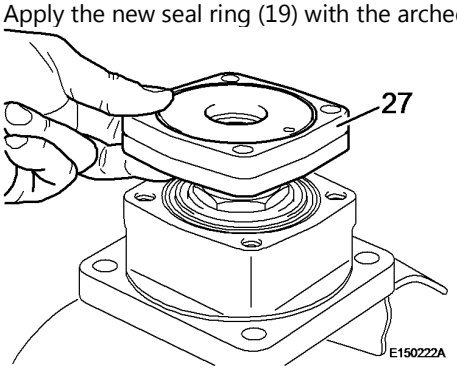

Figure 5

8. Assemble intermediate plate (27).

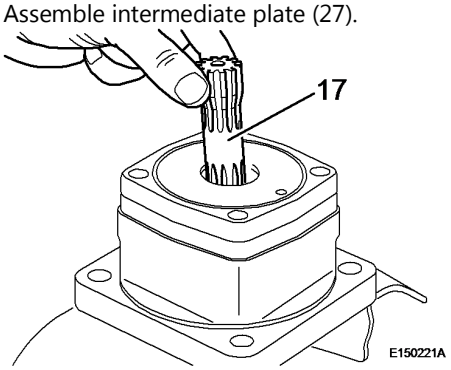

Figure 6

9. Insert universal shfat (17) into the bearing housing with intermediate plate.

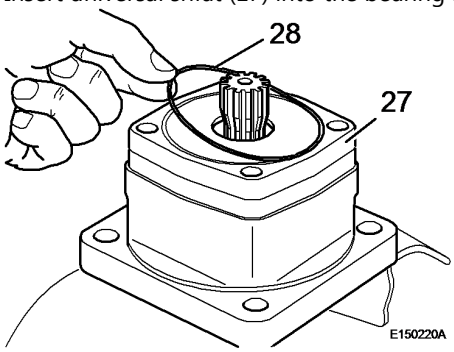

Figure 7

10. Wet O-ring (28) with oil and insert it into the intermediate plate (27).

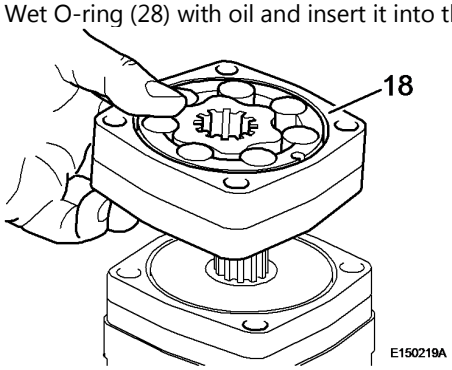

Figure 8

11. Plug gear wheel set (18) onto universal shaft ([Invalid linktarget] /17) in correct assembly position.

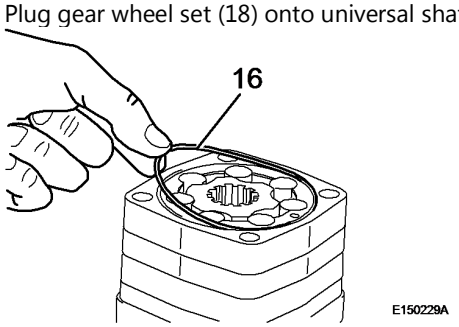

Figure 9

12. Wet O-ring (16) with oil and insert it into the gear wheel set.

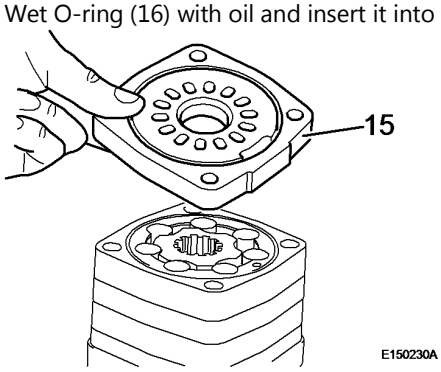

Figure 10

13. Assemble channel plate (15) in correct assembly position.

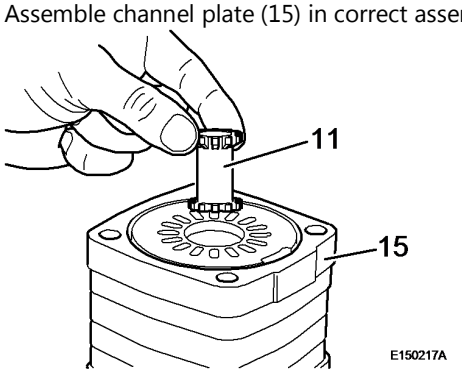

Figure 11

14. Insert valve drive (11) through channel plate (15) into the gear wheel set.

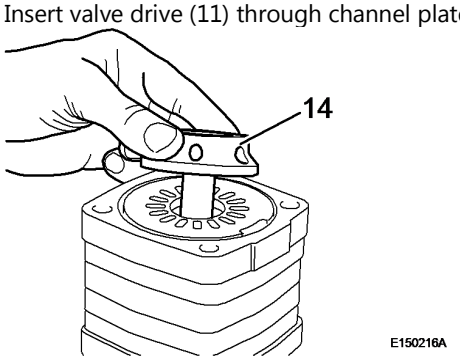

Figure 12

15. Plug slewing valve (14) to the valve drive.

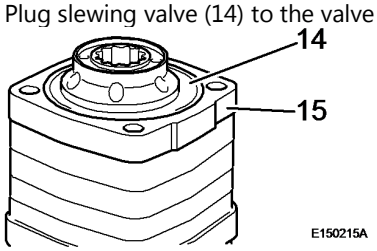

Figure 13

16. Wet O-ring (14) with oil and insert it into the channel plate (15).

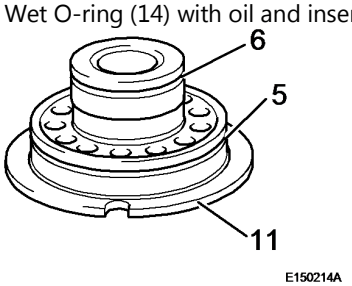

Figure 14

17. Apply some oil to the new O-rings (5 and 6) and assemble to compensation housing (11).

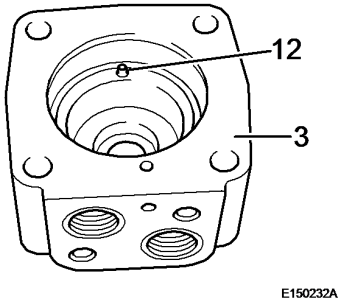

Figure 15

18. If necessary knock a new guide pin (12) into the distributor housing (3).

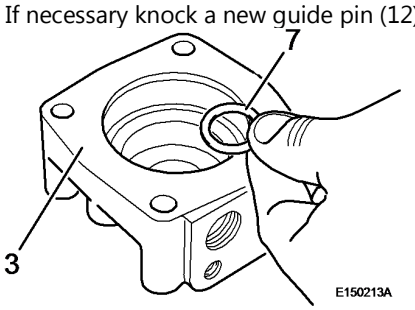

Figure 16

19. Insert spring washer (7) into valve housing (3).

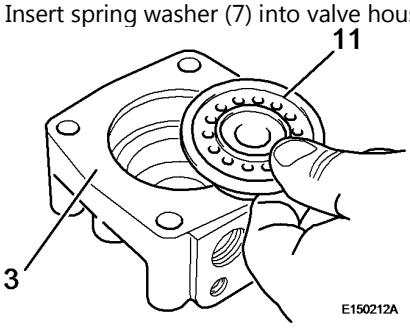

Figure 17

20. Insert compensation shim (11) with the recess towards guide pin (12).

21. Insert spacer piece ([Invalid linktarget] /8) into the compensation shim.

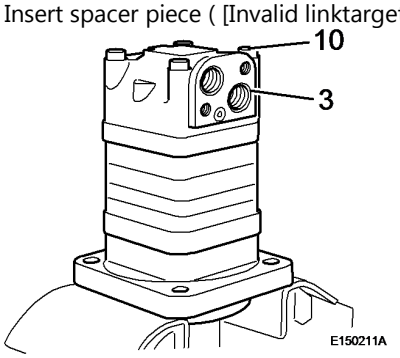

Figure 18

22. Attach valve housing (3), turn in the screws and tighten with 75 Nm.

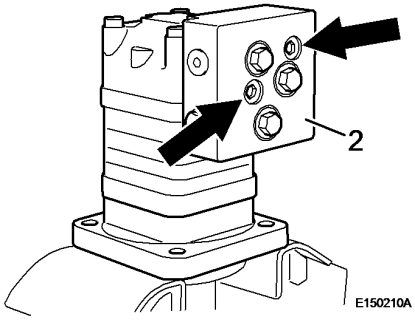

Figure 19

23. Attach balancing valve (2) with new O-rings, screw in socket head cap screws and tighten with 45 Nm.

Document Title:	Function Group:	Information Type:	Date:
Assembling the travel gear	**441**	**Service Information**	**2014/4/3 0**
Profile:			

Assembling the travel gear

Op nbr

NOTE!
If one of the planetary gears in the planetary gear is damaged we recommend to replace the complete planet stage, including the sun gear. The reason for this obvious, because any damage to the planetary gears can cause micro-cracks in the teeth of mating gears and thzerefore cause premature failure after maintenance.

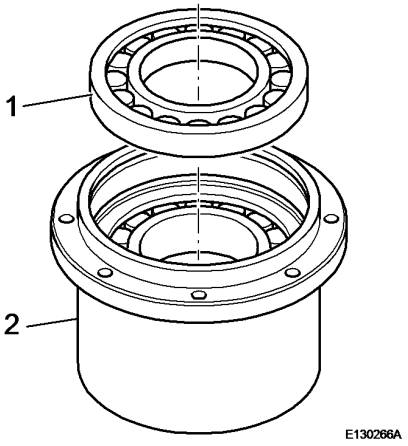

Figure 1

Ball bearing

1. Press ball bearing (1) into drive housing (2) until it bottoms.

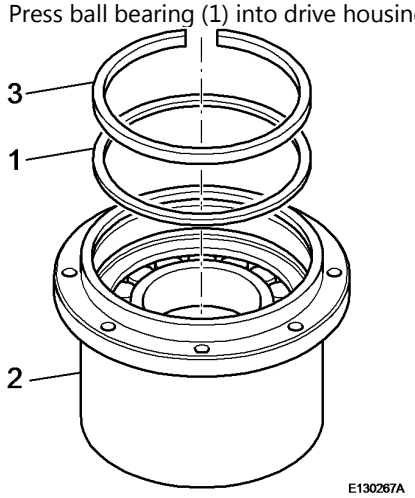

Figure 2

2. Insert spacer ring (1) into drive housing (2).

3. Install snap ring (3).

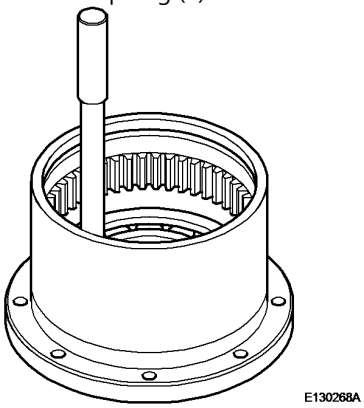

Figure 3

4. Turn the drive housing around and knock the ball bearing in until it abuts vagainst the spacer ring.

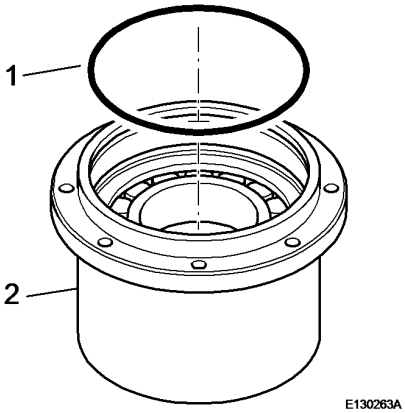

Figure 4

5. Grease the new O-ring (1) and place it on drive housing (2).

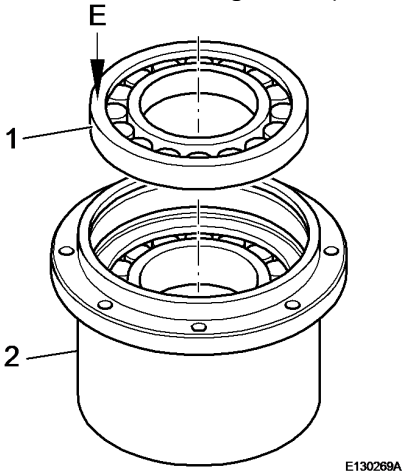

Figure 5

6. Knock the lapped ball bearing (1) in until it abuts against the snap ring.
   NOTE!
   The lapped surface must point up. Use a soft mandrel for pressing thuis to avoid damaging the lapped surface.

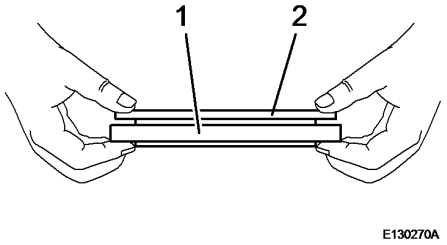

Figure 6

Front seal ring

7. Pull a new rubber ring (1) over the metal seal (2).
   NOTE!
   Check the entire circumference of the rubber ring for correct fit (twisting).

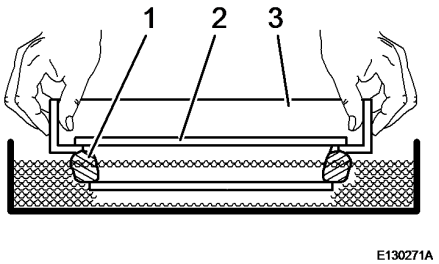

Figure 7

8. Attach assembly tool (3) to seal ring (2) with rubber ring (1).

9. Submerge the rings in a vesell containing trichloroethane, until the rubber ring is complete wetted.

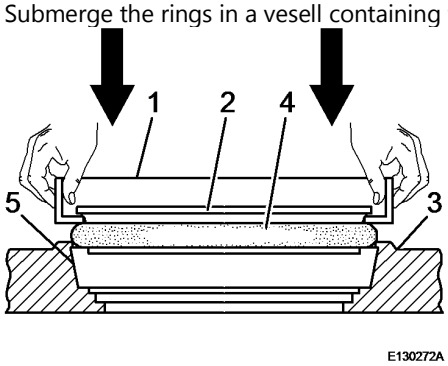

Figure 8

10. Place assembly tool (1) with seal ring (2) in a rectangular position on housing (3).

11. Push rubber ring (4) over retaining lip (5) on housing (3) with a sudden but even impact.

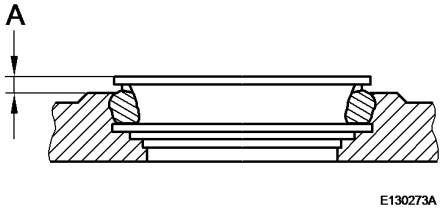

Figure 9

12. After assembly check the height A at least at four locations offset by 90 degree to each other.

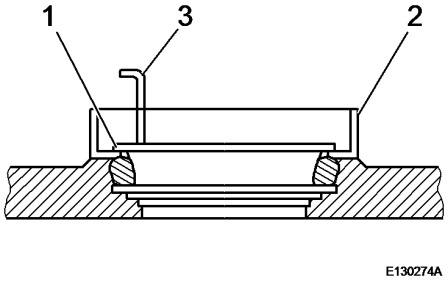

Figure 10

13. When correcting the rubber ring use assembly tool (2) for pressing or adjustmenmt tool (3) for pulling up.
    NOTE!
    If seal (1) has not been adjusted to the specified protrusion height the seal must be removed and the assembly process repeated.

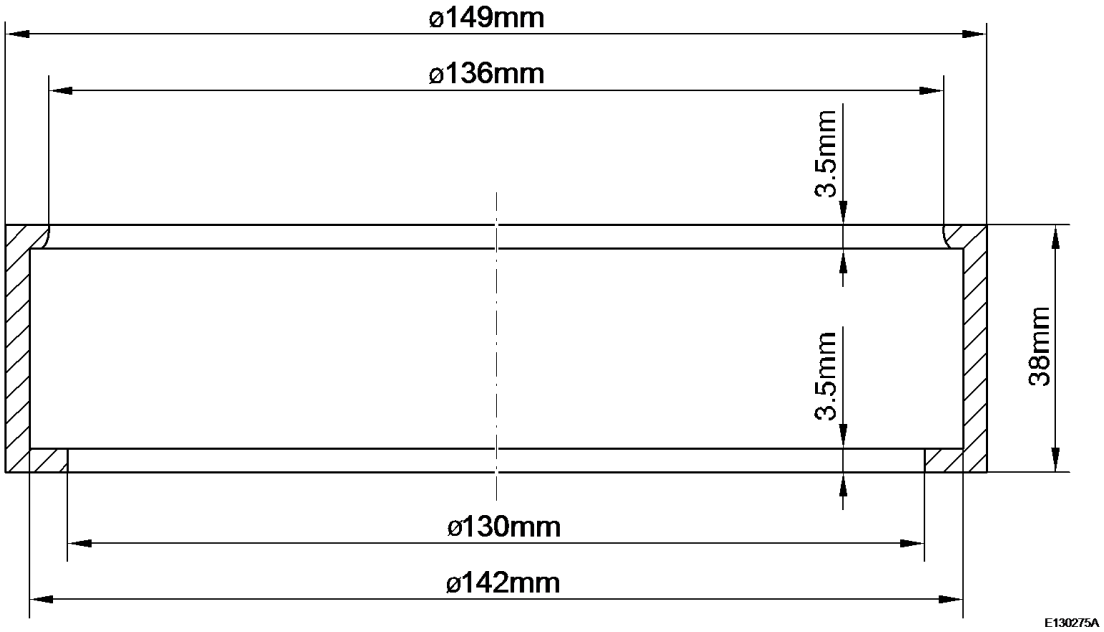

Figure 11
Assembly tool for rubber ring

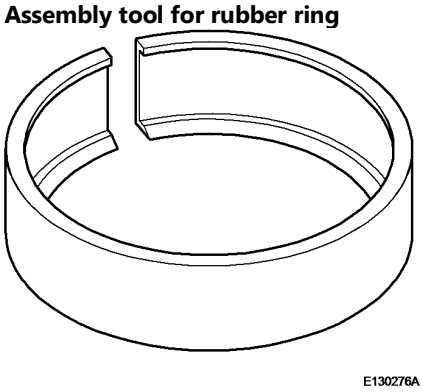

Figure 12
Assembly tool

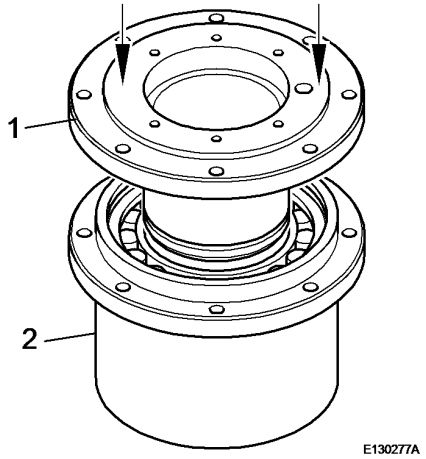

Figure 13

Hub

14. Insert and press hub (1) into drive housing (2).

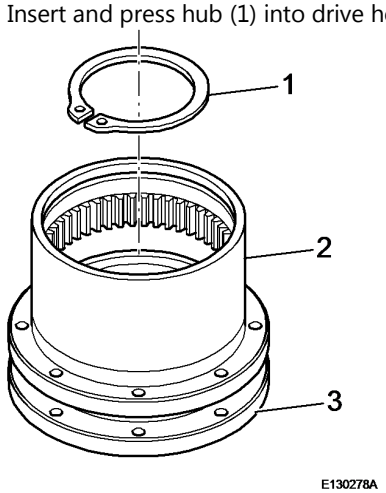

Figure 14

15. Secure hub (3) in drive housing (2) with snap ring (1).

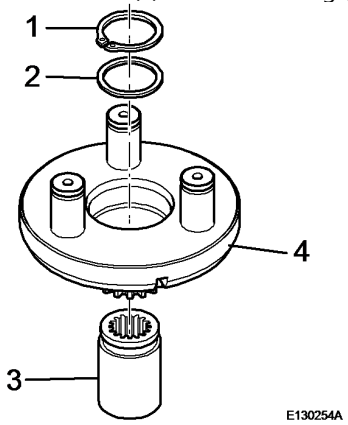

Figure 15

Planet carrier

16. Press coupling (3) into planet carrier (4).

17. Assemble spacer disc (2) and secure with circlip (1).

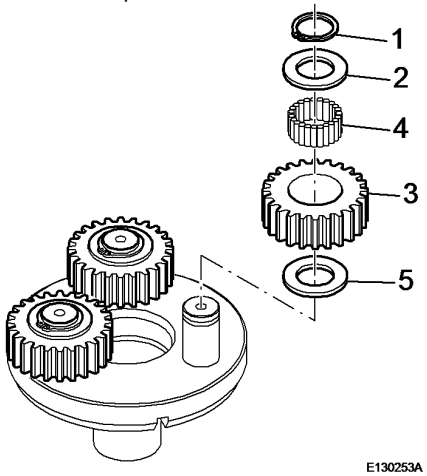

Figure 16

18. Assemble friction disc (5) to planet carrier.

19. Assemble pinion (3) with needles (4).

20. Attach friction discs (2) and fasten with circlips (1).

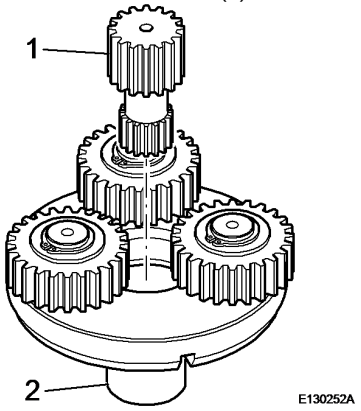

Figure 17

21. Insert sun gear (1) through the planet carrier into coupling (2).

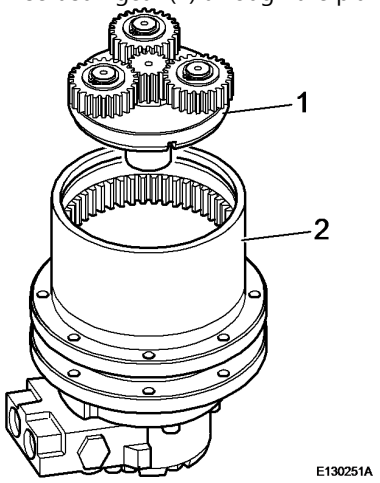

Figure 18

22. Insert planet carrier (1) into output housing (2).

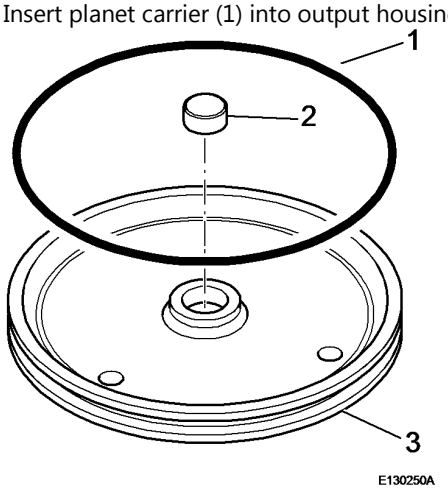

Figure 19

Cover

23. Lay new O-ring (1) onto cover (3) and press in plug (2).

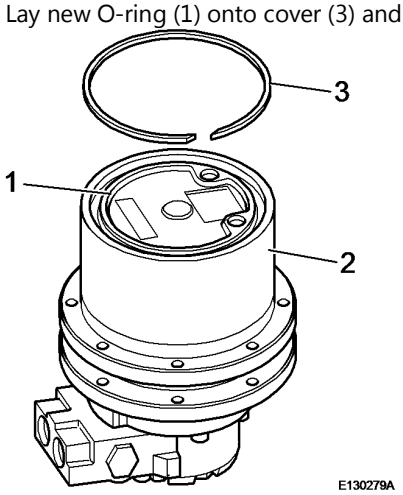

Figure 20

24. Press cover (1) into drive housing (2).

25. Place circlip (3) into the groove in the housing to locate the cover.

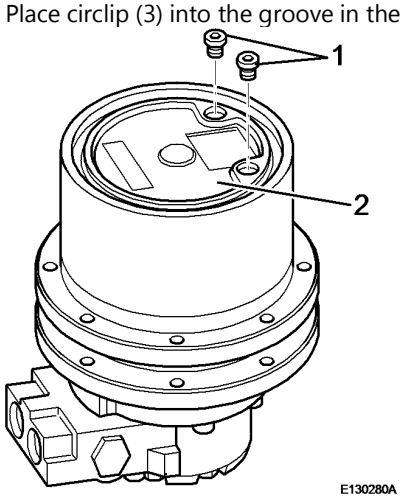

Figure 21

26. Turn both plugs (1) into cover (2).

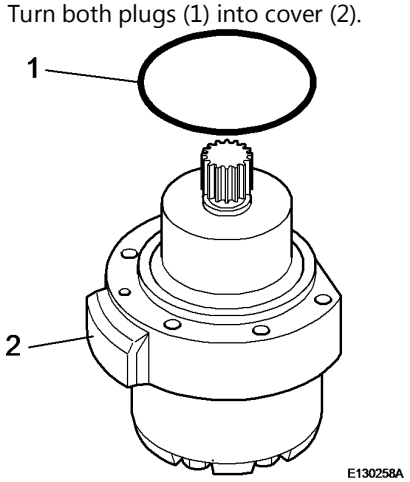

Figure 22

27. Grease the new O-ring (1) and place it on hydraulic motor (2).

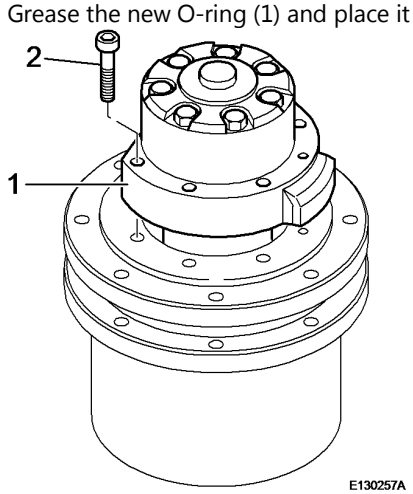

Figure 23

28. Assemble hydraulic motor (1), turn in screws (2) and tighten with 25 Nm.

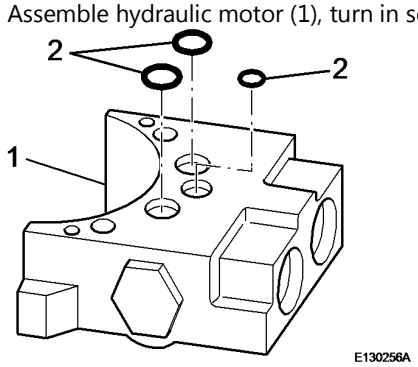

Figure 24

29. Grease three new O-ring (2) and place them on valve housing (1).

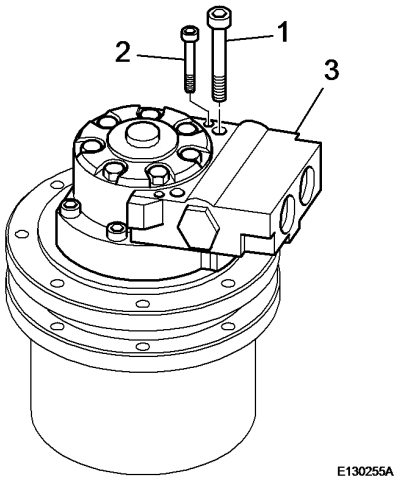

Figure 25

30. Attach the complete valve (3) to the hydraulic motor.

31. Turn in screws (2) and tighten with 6 Nm, then tight screws (1) with 25 Nm.

Document Title:	Function Group:	Information Type:	Date:
Assembling the valve unit	**441**	**Service Information**	**2014/4/3 0**
Profile:			

Assembling the valve unit

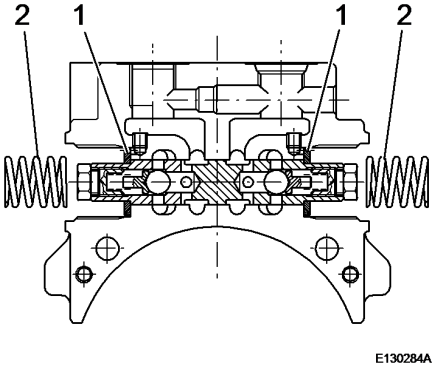

Figure 1

Op nbr

1. Insert washers (1) and springs (2) into the valve unit.

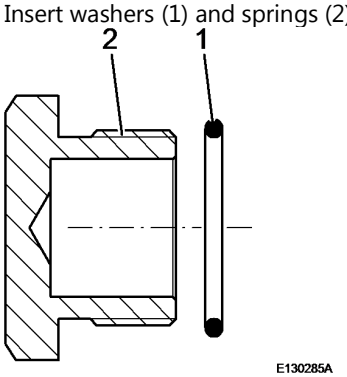

Figure 2

2. Fit new O-rings (1) to both plugs (2).

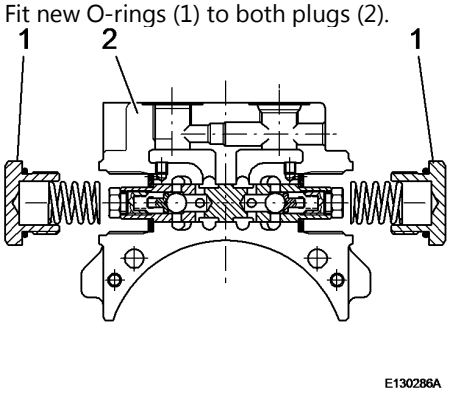

Figure 3

3. Turn both plugs (1) into valve housing (2).

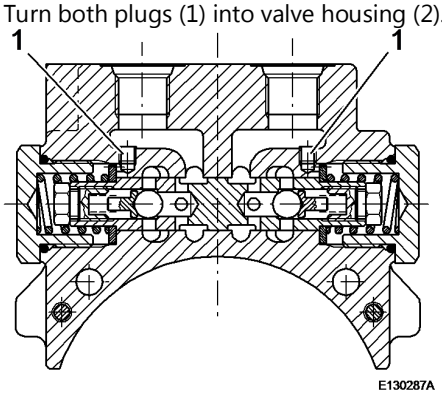

Figure 4

WARNING

Before assembling the nozzles make sure that the bores are free of dirt particles.

4. Screw both restrictors (1) into the bores and tighten.

Document Title:	Function Group:	Information Type:	Date:
Disassembling the hydraulic motor	**441**	**Service Information**	**2014/4/3 0**
Profile:			

Disassembling the hydraulic motor

Disassembling

Op nbr

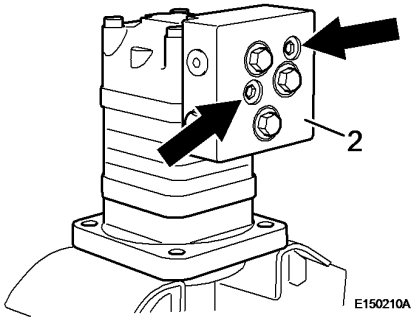

Figure 1

1. Remove the hydraulic motor.
2. Unscrew both socket head cap screws (arrows).
3. Take off balancing valve (2) with O-rings.

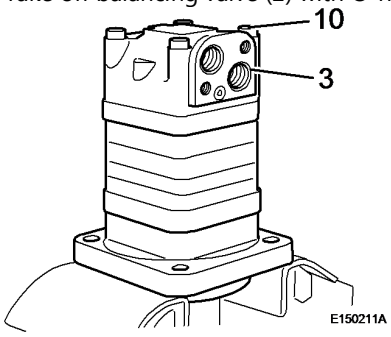

Figure 2

4. Unscrew all screws (10) and take off valve housing (3).

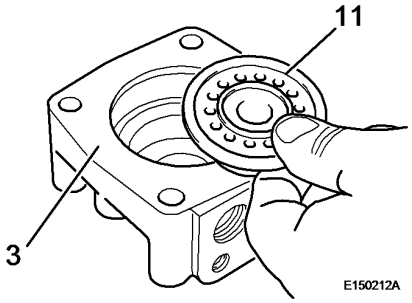

Figure 3

5. Knock compensation shim (11) out of valve housing (3).

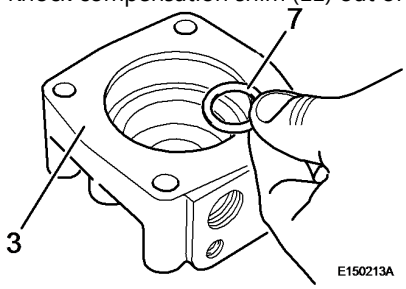

Figure 4

6. Take spring washer (7) out of valve housing (3).

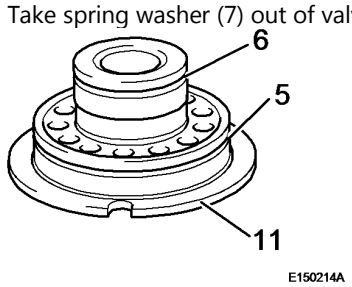

Figure 5

7. Remove O-rings (5 and 6) from compensation shim (11).

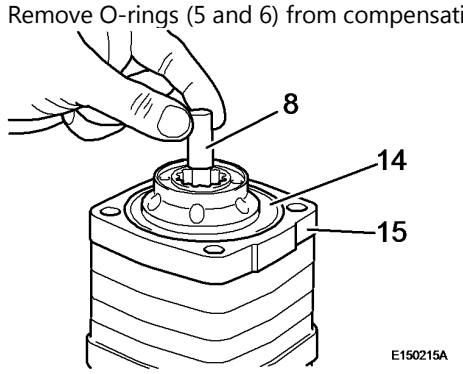

Figure 6

8. Remove spacer block (8).

9. Take O-ring (14) out of channel plate (15).

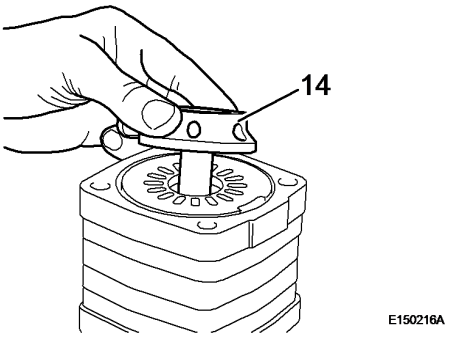

Figure 7

10. Take off slewing valve (4).

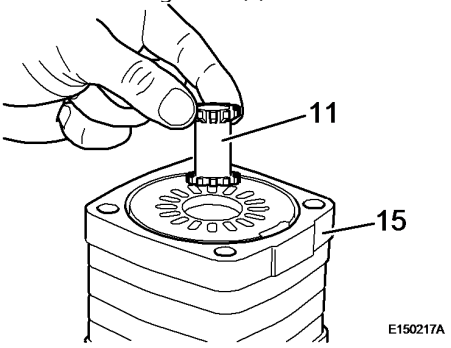

Figure 8

11. Pull valve drive (11) out of channel plate (15).

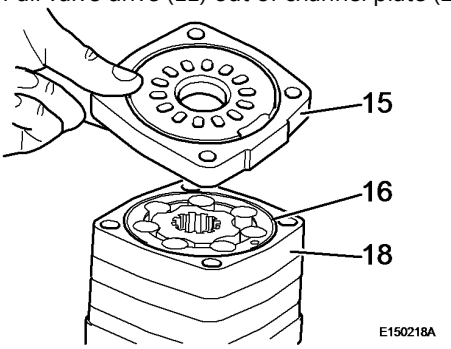

Figure 9

12. Take off channel plate (15).
    NOTE!
    Observe the installation position!

13. Take O-ring (16) out of gear wheel set (18).

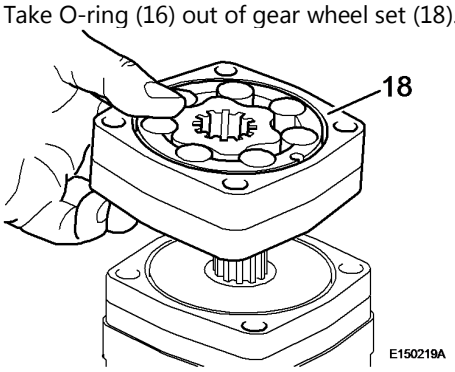

Figure 10

14. Take off gear wheel set (18).

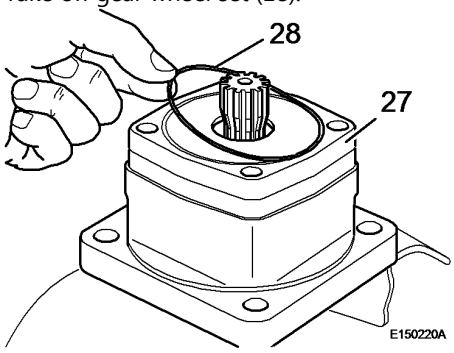

Figure 11

15. Remove O-ring (28) from intermediate plate (27).

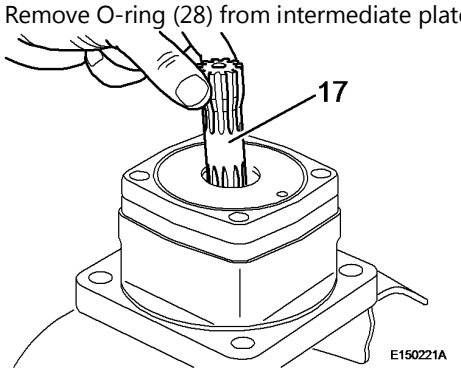

Figure 12

16. Remove universal shaft (17).

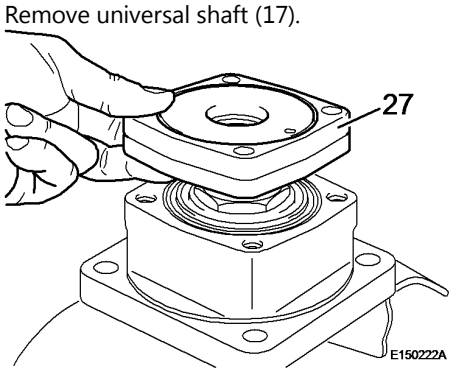

Figure 13

17. Remove intermediate plate (27).

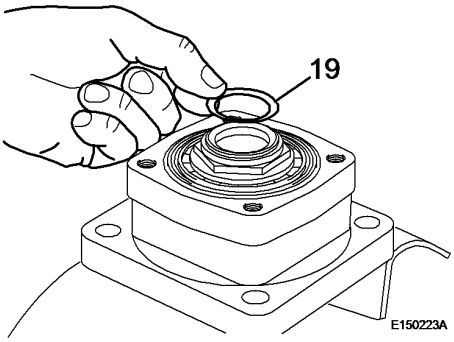

Figure 14

18. Take off seal ring (19).
    NOTE!
    Observe the installation position!

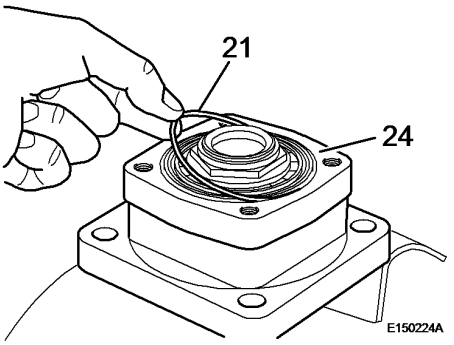

Figure 15

19. Remove O-ring (21) from bearing housing (24).

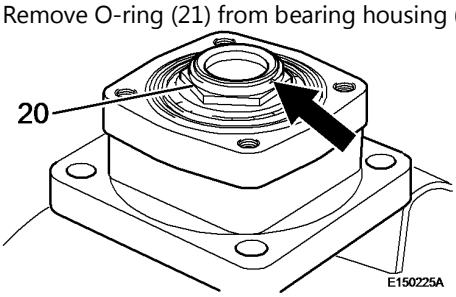

Figure 16

20. Remove lock ([Invalid linktarget] /arrow).

21. Unscrew nut (20).

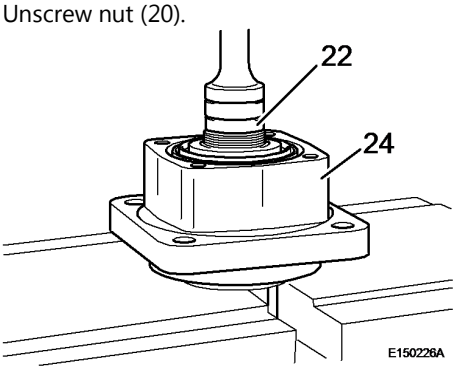

Figure 17

22. Press shaft with pinion (22) out of bearing housing (24).

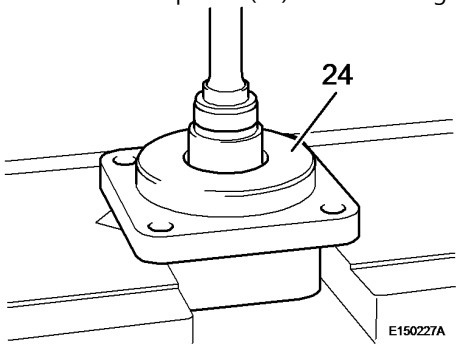

Figure 18

23. Press both roller bearings ([Invalid linktarget] /26) and spacer piece ([Invalid linktarget] /25) out of bearing housing (24).

24. Remove radial seal ([Invalid linktarget] /23).

25. Check all parts for damage and wear, replace if necessary.

Document Title:	Function Group:	Information Type:	Date:
Dismantling the travel gear	**441**	**Service Information**	**2014/4/3 0**
Profile:			

Dismantling the travel gear

Op nbr

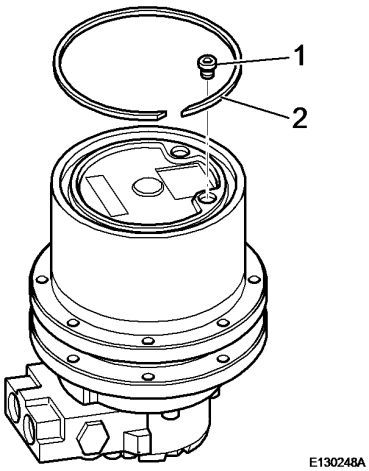

Figure 1

Cover

1. Unscrew both plugs (1).
2. Remove circlip (2) from the cover.

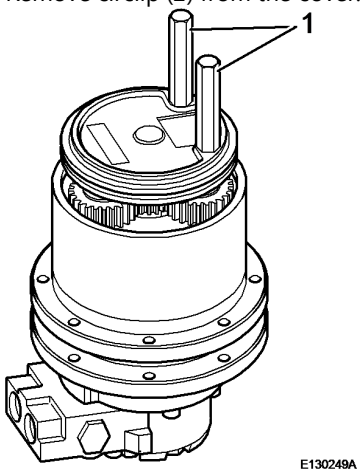

Figure 2

3. Turn in two threaded rods (1) and pull the cover out of the housing.

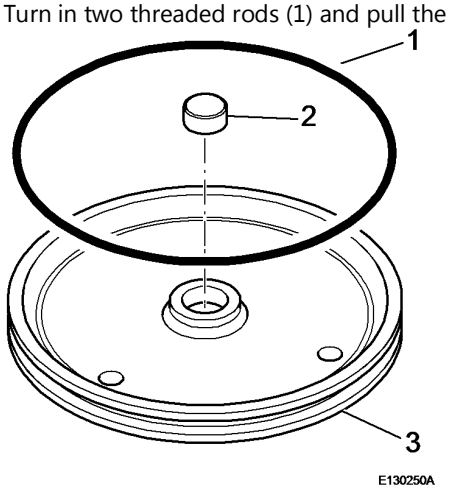

Figure 3

4. Remove O-ring (1) and plug (2) from end cover.

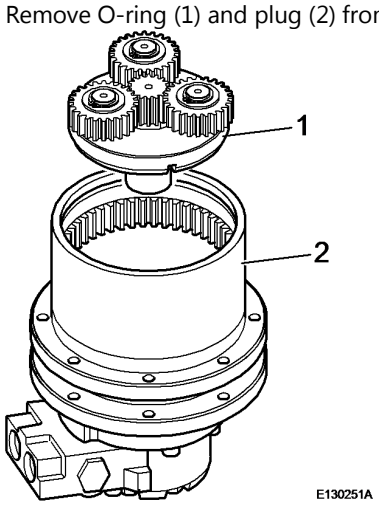

Figure 4

Planet carrier

5. Take planet carrier (1) out of housing (2).

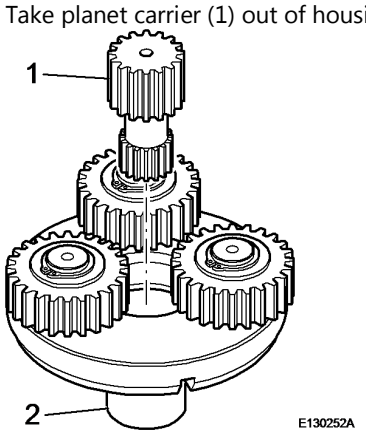

Figure 5

6. Pull sun gear (1) out of coupling (2).

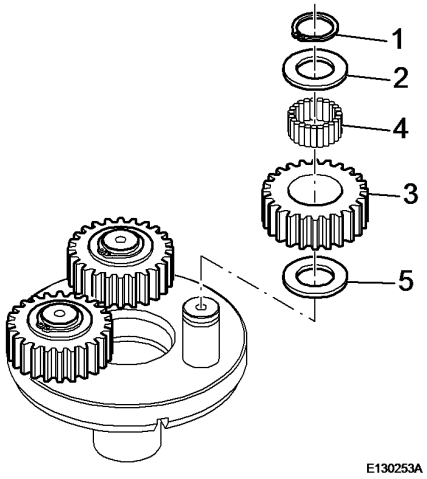

Figure 6

7. Unclip circlips (1).
8. Take off friction discs (2).
9. Take off pinion (3) with needles (4).
10. Take friction discs (5) off planet carrier.

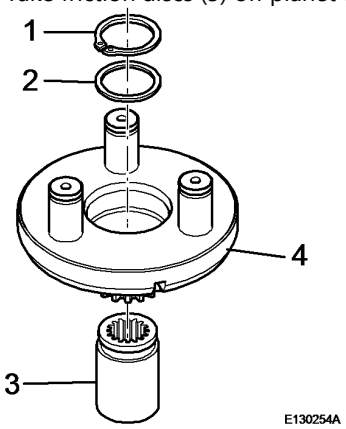

Figure 7

11. Unclip circlip (1).
12. Take spacer disc (2) off the coupling.
13. Press coupling (3) out of planet carrier (4).
14. Check planet carrier (4) for damage and wear, replace if necessary.

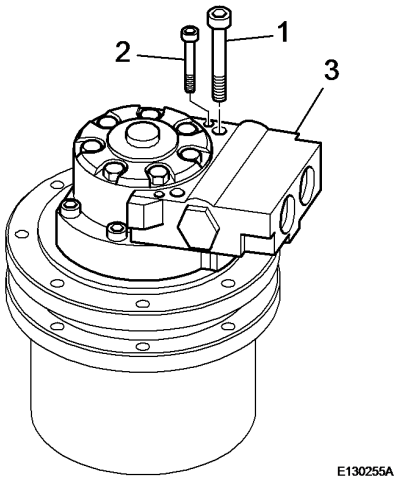

Figure 8

Valve

15. Unscrew screws (1 and 2) and take off valve (3).

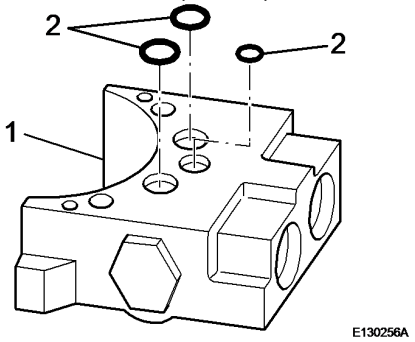

Figure 9

16. Turn valve (1) around and take off O-rings (2).

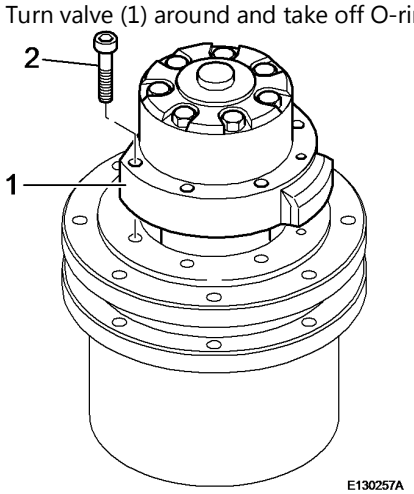

Figure 10

Hydraulic motor

17. Unscrew screws (1) and take off hydraulic motor (2).

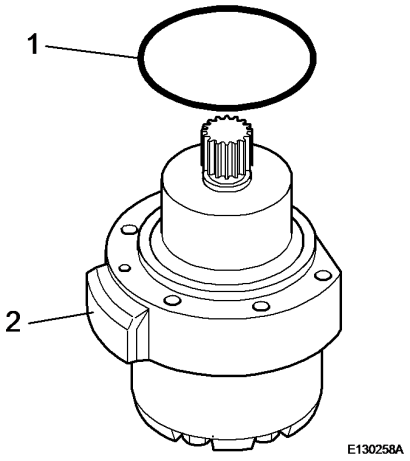

Figure 11

18. Take O-ring (1) off hydraulic motor (2).

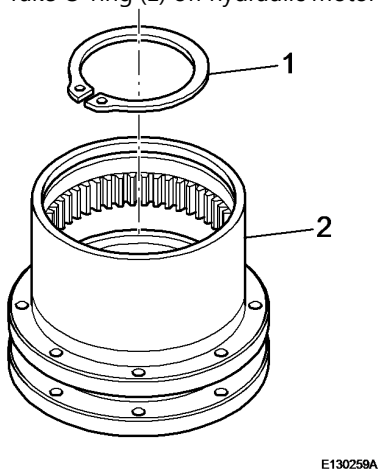

Figure 12

Hub

19. Take circlip (1) out of housing (2).

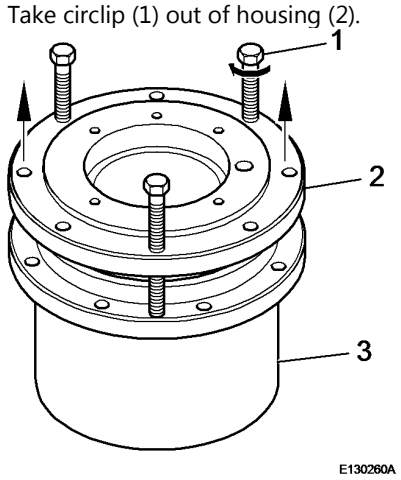

Figure 13

20. Turn in three forcing screws M10 (1) and force hub (2) off drive housing (3).

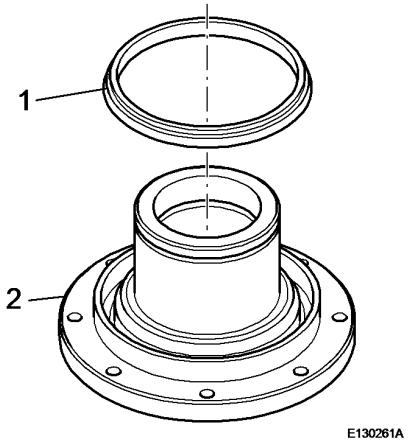

Figure 14

21. Take seal ring (1) off hub (2).

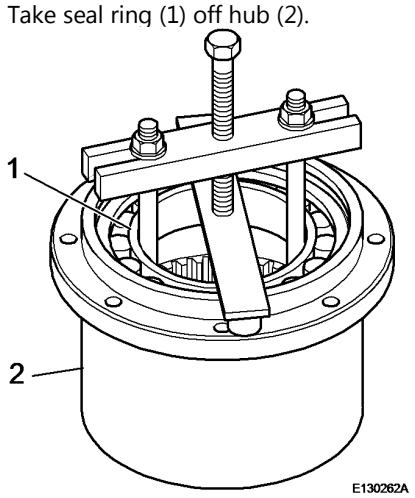

Figure 15

Housing

22. Pull ball bearing (1) with the lapped surface out of drive housing (2) using a conventional puller.

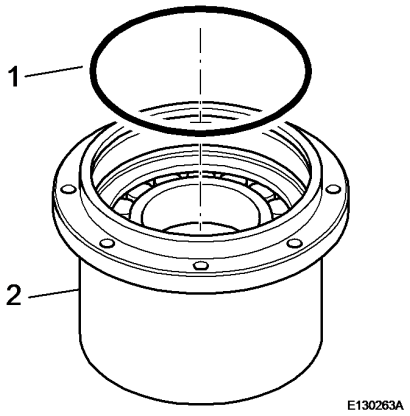

Figure 16

23. Take O-ring (1) off drive housing (2).

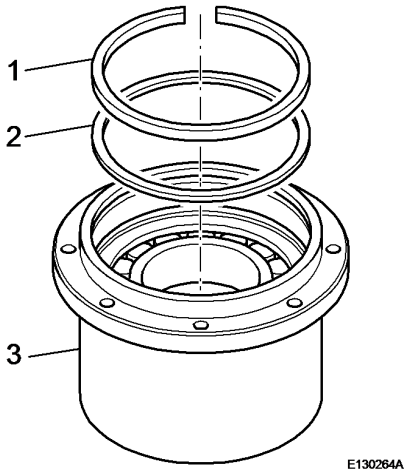

Figure 17

24. Remove snap ring (1).

25. Take spacer ring (2) out of the output housing (3).

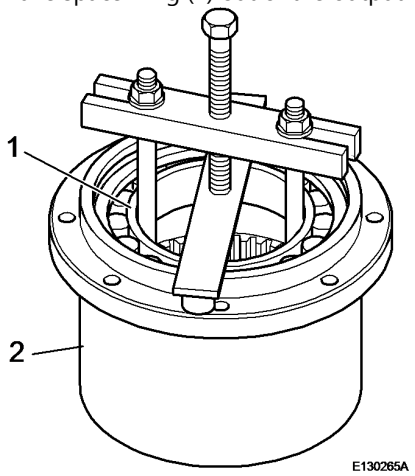

Figure 18

26. Pull ball bearing (1) out of drive housing (2) using a conventional puller.

Document Title:	Function Group:	Information Type:	Date:
Dismantling the valve unit	**441**	**Service Information**	**2014/4/3 0**
Profile:			

Dismantling the valve unit

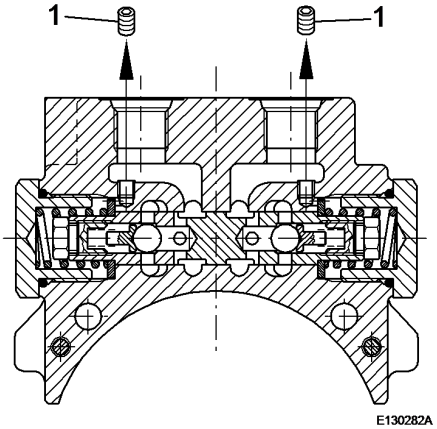

Figure 1

Op nbr

1. Unscrew both restrictors (1) with a 2.5 mm Allen key.

   WARNING

   Make sure the nozzles do not drop into the valve unit.

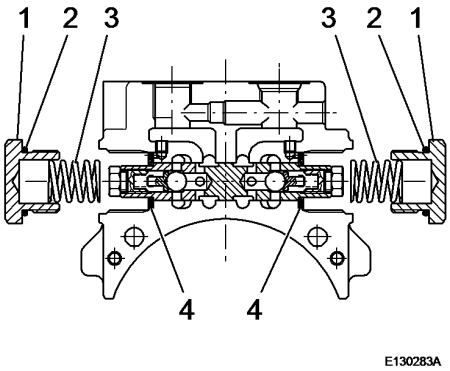

   Figure 2

2. Unscrew both plugs (1).
3. Take out springs (3) and washers (4).
4. Remove O-rings (2) from plugs (1).

Document Title:	Function Group:	Information Type:	Date:
High speed solenoid valve	**441**	**Service Information**	**2014/4/3 0**
Profile:			

High speed solenoid valve

Function

When the change-over switch ([Invalid linktarget] /1) is in OFF-position and the solenoid ([Invalid linktarget] /1) is not excited, spool ([Invalid linktarget] /2) will close the passage to port B and the hydraulic valves for low / high travel motor speed are not supplied with auxiliary / pilot pressure. The travel motors are thereby set to LOW SPEED.

When the change-over switch ([Invalid linktarget] /1) is in ON-position and the solenoid ([Invalid linktarget] /1) is excited, spool ([Invalid linktarget] /2) will open the passage to port B and the hydraulic valves for low / high travel motor speed are supplied with auxiliary / pilot pressure. The travel motors are thereby set to HIGH SPEED.

Solenoid dead – low travel speed
B = depressurized

Solenoid live – high travel speed
B = 32 bar

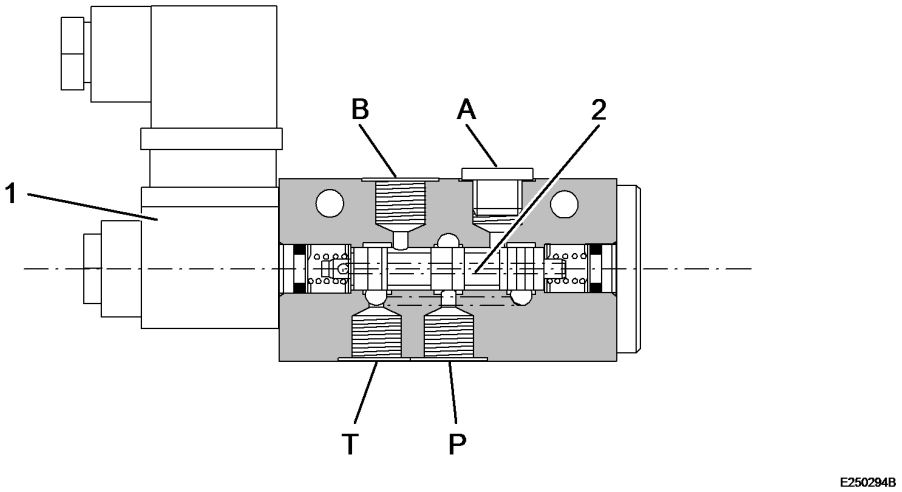

Figure 1

1. Solenoid valve
   A port control lever
   B port travel motor
   P pump
   T tank

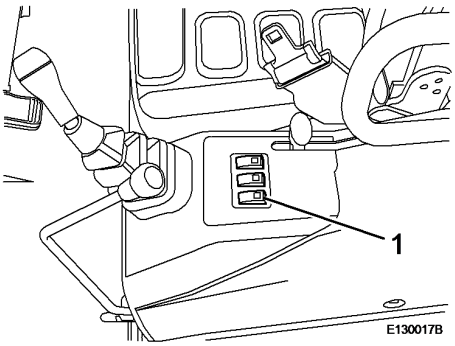

Figure 2

Document Title:	Function Group:	Information Type:	Date:
Hydraulic motor – slewing of superstructure	**441**	**Service Information**	**2014/4/3 0**
Profile:			

Hydraulic motor – slewing of superstructure

Schematic

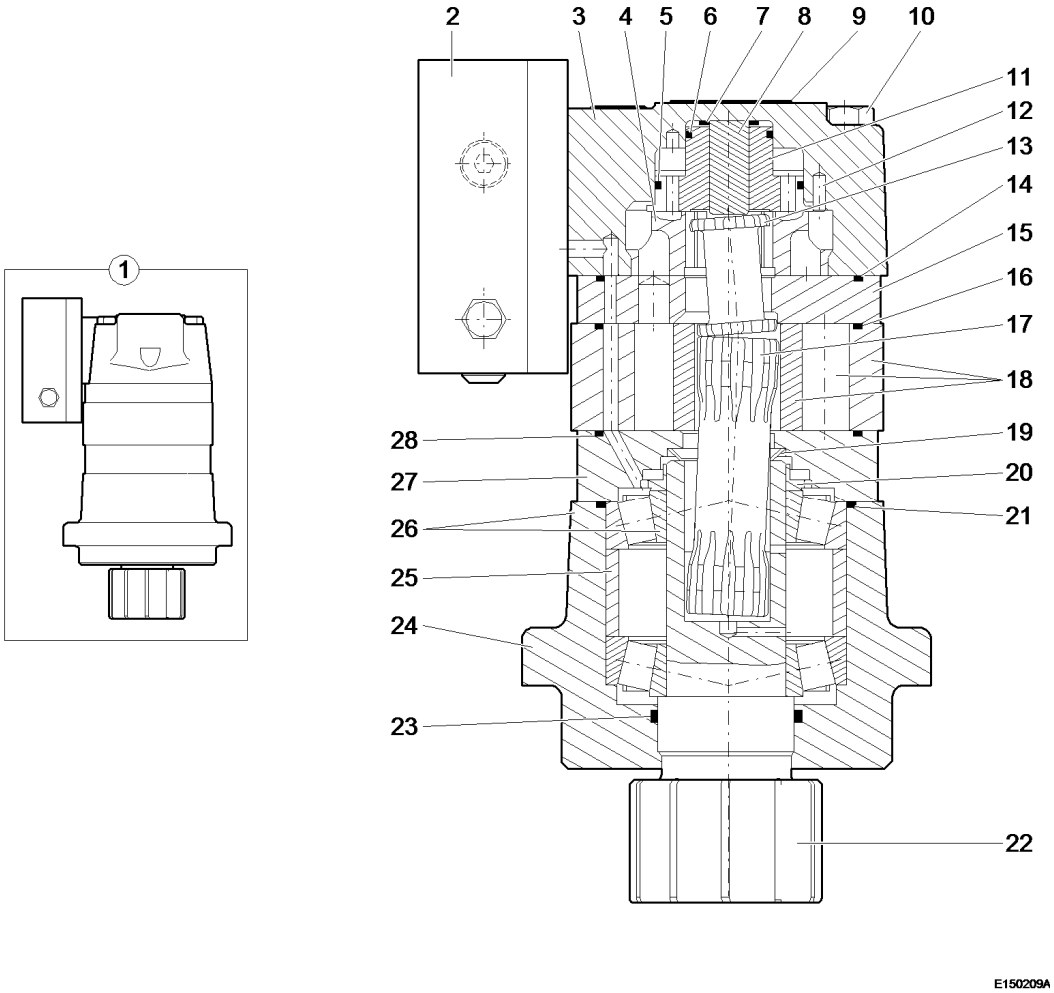

Figure 1

1 Hydraulic motor
2 Balancing valve for slewing movement
3 Valve housing
4 Slewing valve
5 O-ring
6 O-ring
7 Spring washer
8 Spacer piece
9 Identification plate
11 Compensation shim
12 Guide pin
13 Valve drive
14 O-ring
15 Channel plate
16 O-ring
17 Universal shaft
18 Gear wheel set
19 Seal ring
21 O-ring
22 Shaft with pinion
23 Radial seal
24 Bearing housing
25 Spacer piece
26 Roller bearing
27 Intermediate plate

10 Screw

20 Nut

Document Title:	Function Group:	Information Type:	Date:
Installing the gear motor	**441**	**Service Information**	**2014/4/3 0**
Profile:			

Installing the gear motor

Op nbr 4312

Vacuum pump

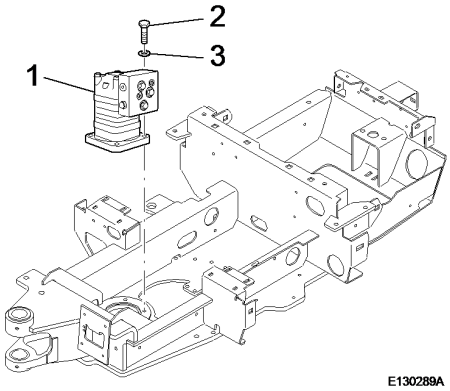

Figure 1

1. Clean contact faces for gear motor.
2. Attach and align gear motor (1).
3. Cover the threads of socket head cap screws (2) with screw retention agent 3403361, turn in with washer (3) and tighten with 85 ± 18 Nm.

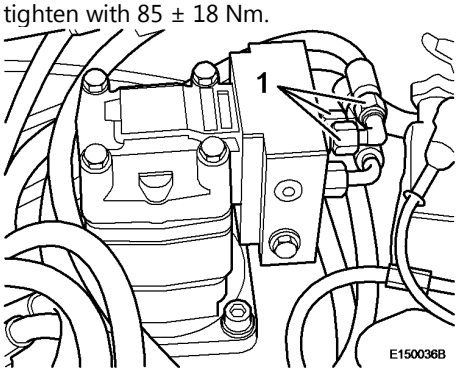

Figure 2

4. Unscrew the plugs from hydraulic lines (1), connect the lines to the motor, align correctly and tighten with 48 ± 10 Nm.

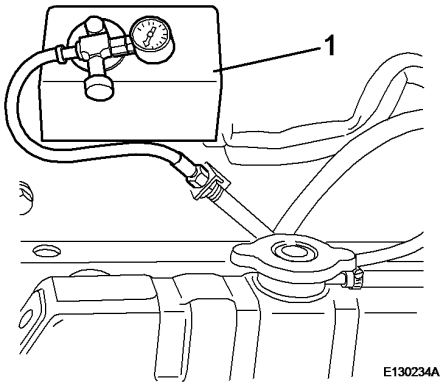

Figure 3

5. Remove vacuum pump (1) and install the breather.

6. Start the engine, check machine functions and leak tightness, fill up oil if necessary.

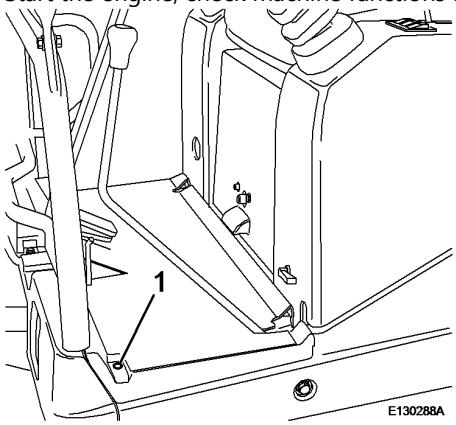

Figure 4

7. Install the floor plate and tighten all screws (1).

Document Title:	Function Group:	Information Type:	Date:
Removing the gear motor	**441**	**Service Information**	**2014/4/3 0**
Profile:			

Removing the gear motor

Op nbr 4312

Vacuum pump

WARNING

Before starting work make sure that the working attachment is not resting on the ground, so that slewing of the superstructure is possible.

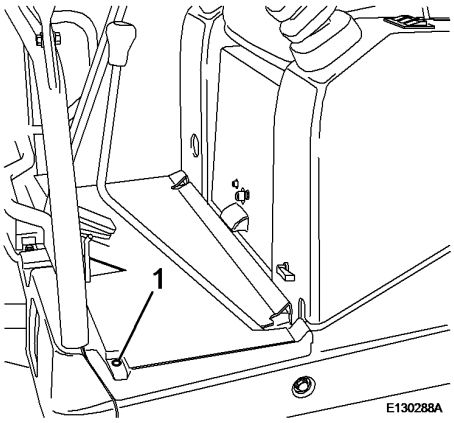

Figure 1

1. Unscrew all screws (1) from floor plate and remove the floor plate.

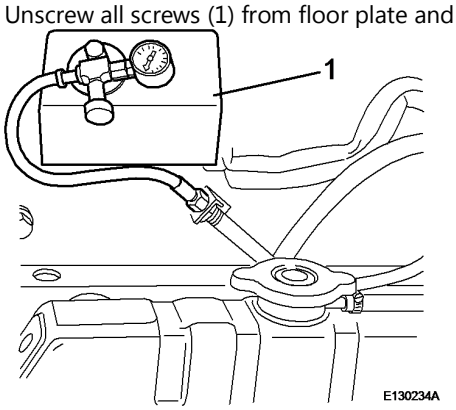

Figure 2

2. Remove the breather and install vacuum pump (1).

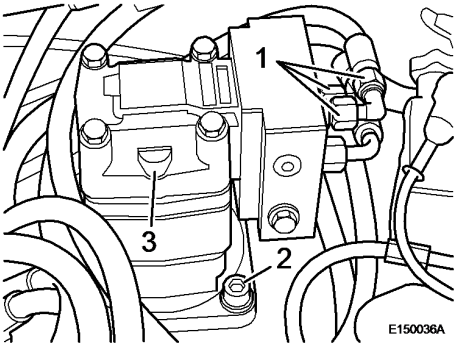

Figure 3

3. Mark hydraulic lines (1), unscrew and close with plugs.

   WARNING

   Catch hydraulic fluid and dispose of environmentally.

4. Unscrew all screws (2) and take gear motor (3) off.

Document Title:	Function Group:	Information Type:	Date:
Travel gear	**441**	**Service Information**	**2014/4/3 0**
Profile:			

Travel gear

Schematic

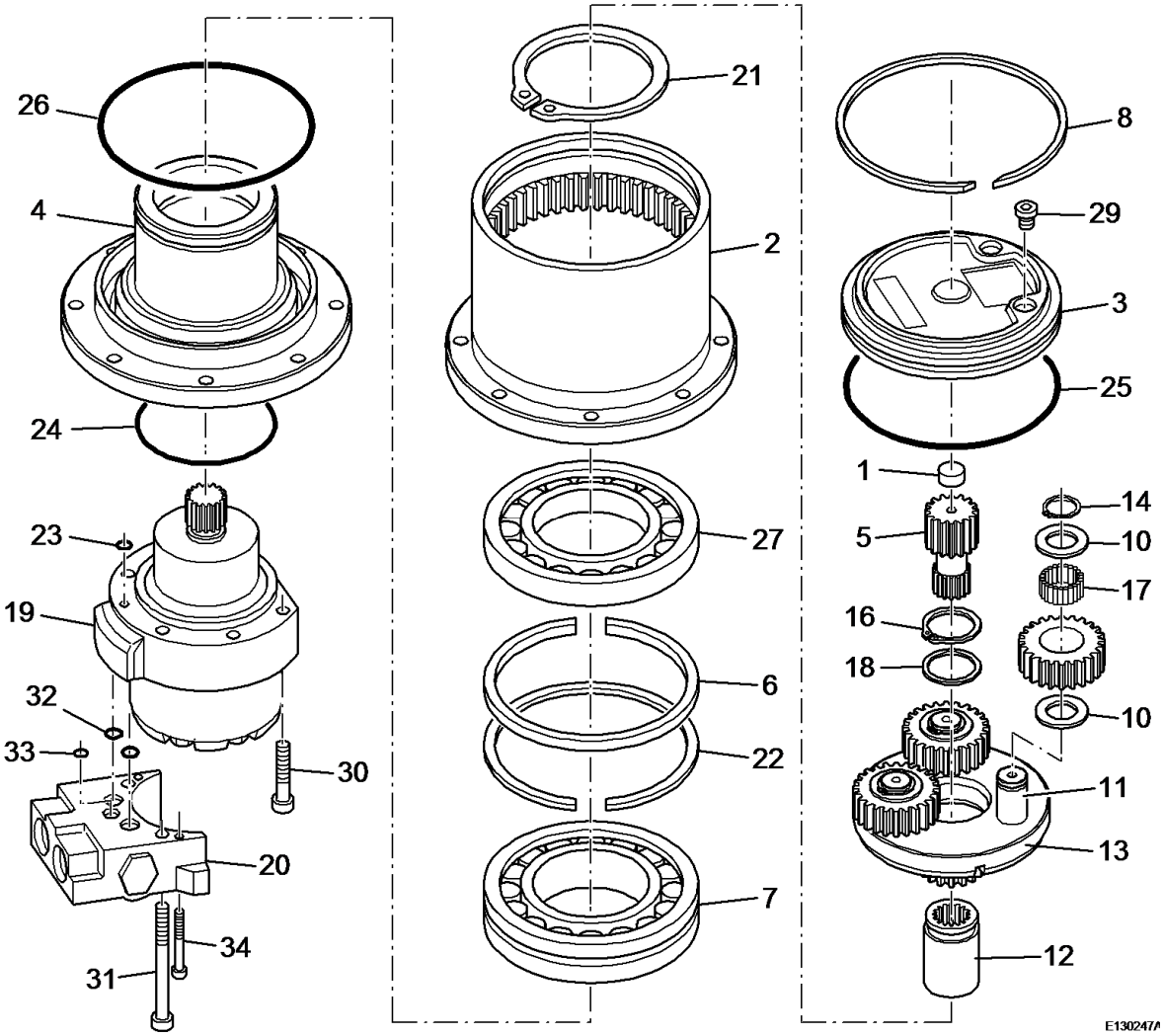

Figure 1

1 Plug	10 Friction disc	19 Hydraulic motor	28 Washer
2 Output housing	11 Knurled bolt	20 Valve	29 screw plug
3 End cover	12 Coupling	21 Circlip	30 Screw
4 Hub	13 Planet carrier	22 Circlip	31 Screw
5 Sun gear	14 Circlip	23 O-ring	32 O-ring
6 Spacer ring	15 Snap ring	24 O-ring	33 O-ring
7 Bearing with seal	16 Circlip	25 O-ring	34 Screw
8 Circlip	17 Needles	26 O-ring	
9 Planet gear	18 Shim	27 Ball bearing	

Document Title:	Function Group:	Information Type:	Date:
Valve unit	**441**	**Service Information**	**2014/4/3 0**
Profile:			

Valve unit

Schematic

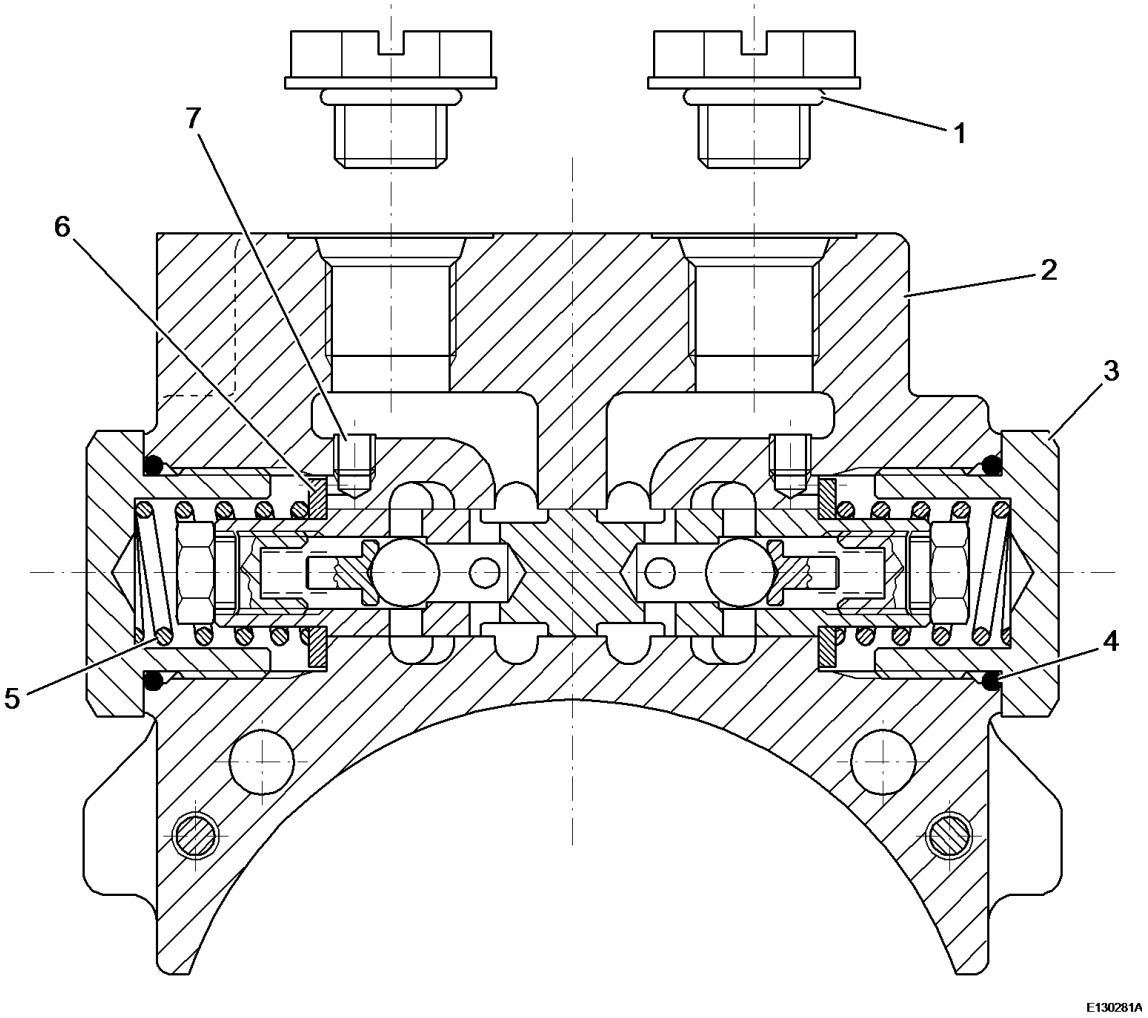

Figure 1

1	O-ring	5	Spring
2	Valve unit	6	Washer
3	Valve plug	7	Restrictors M5 with Ø 0.6 mm
4	O-ring		

Document Title:	Function Group:	Information Type:	Date:
Disassembling the travel motor	**441**	**Service Information**	**2014/4/3 0**
Profile:			

Disassembling the travel motor

Op nbr 4311

Lifting sling 1.5 m

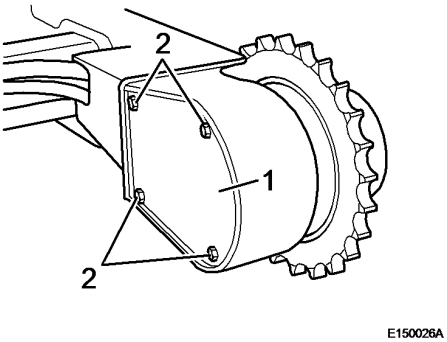

Figure 1
Remove the cover

1. Cover
2. Screws

1. Unscrew screws (2) from cover (1) of the travel motor and take the cover off.

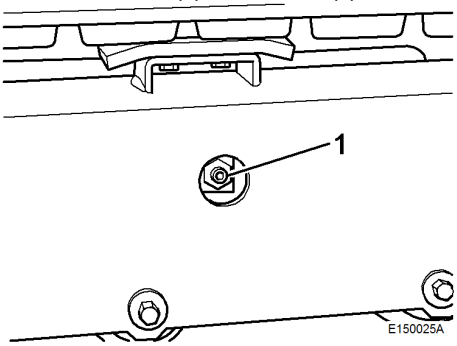

Figure 2

1. Crawler track tensioning valve

WARNING

The grease in the track adjustment cylinder is under high pressure. Do not remove the nipple or the valve unit to remove the grease.

Never loosen the valve for more than 2 turns as otherwise it will be thrown out together with the grease.

Do not stand near the guiding sprocket, because the track tensioning device may drop down.

2. Lift up the track, unscrew valve (1) (max. two turns) and let all grease run out, until the track is completely relieved.

3. Removal of rubber track, see chapter 7.

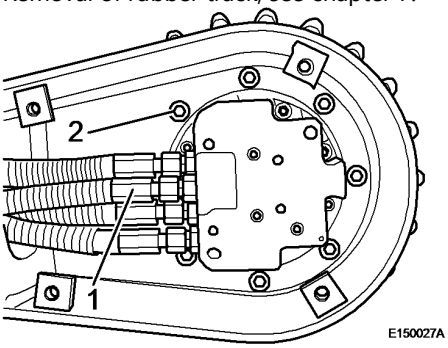

Figure 3
Removing hydraulic hoses and screws

1. Hydraulic hoses
2. Screws

4. Mark and disconnect hydraulic hoses (1) from the travel motor. Close hose ends and ports to prevent oil from seeping out and dirt from entering.

5. Unscrew the travel motor fastening screws (2) from the lower frame.

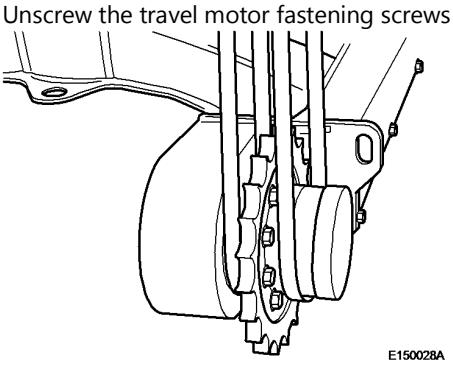

Figure 4
Disassembling the travel motor

6. Place a lifting sling at both sides of the sprocket around the travel motor and tension it. Remove the travel motor as a complete unit.
   NOTE!
   Lift the travel motor as close to the track drive as possible to keep the balance.

   NOTE!
   Position marks on lower frame and travel gear will be of help during later assembly.

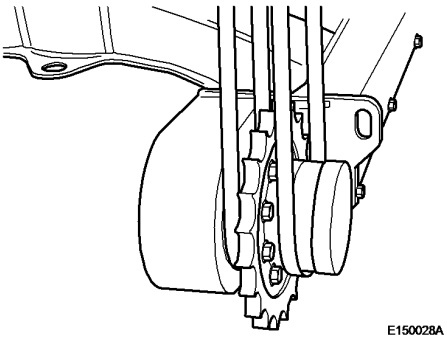

Figure 5
Installing the travel motor

Document Title: **Installing the travel motor**	Function Group: **441**	Information Type: **Service Information**	Date: **2014/4/3 0**
Profile:			

Installing the travel motor

Op nbr 4311

Lifting sling 1.5 m

NOTE!
Thoroughly examine the contact faces on lower frame and gear for burrs, dirt and rust flakes.

1. Place a lifting sling at both sides of the sprocket around the travel motor.
   Lift the motor up and mount it to the lower frame.

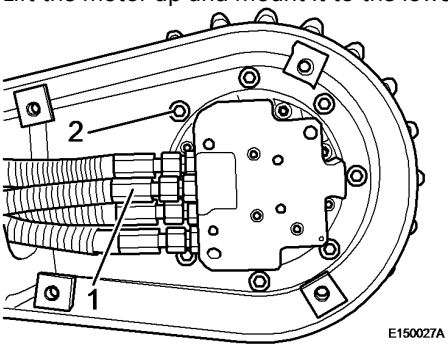

Figure 1
Installing hydraulic hoses and screws

2. Slightly cover fastening screws (2) with screw retention agent, screw in and tighten with 250...300 Nm.

3. Connect the marked hydraulic hoses (1) to the travel motor.

4. Fasten cover ([Invalid linktarget] /1) for the travel motor.

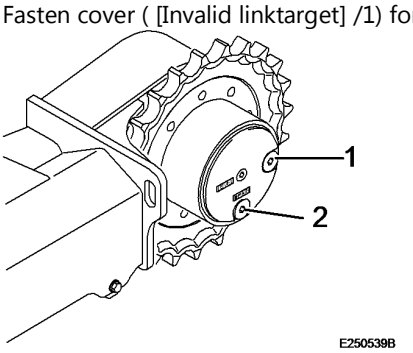

Figure 2
Checking the oil level

1. Filler opening
2. Oil drain plug

5. Check the oil level in the travel motor. If necessary change or replenish the oil.

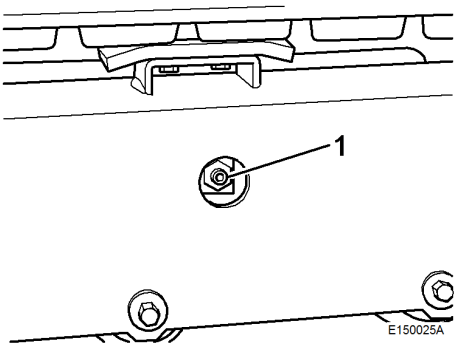

Figure 3

1. Crawler track tensioning valve

6. Install the rubber track and close the valve unit (1).
   Assembly of rubber or steel track, see chapter 7.

7. Connect the grease gun and operate, until the specified track tension is reached.

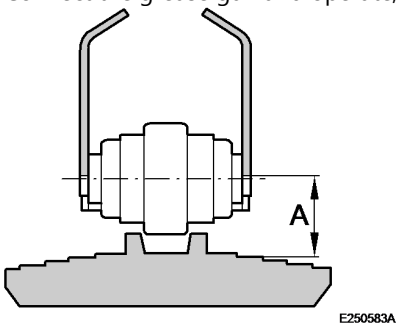

Figure 4
Sagging of track

8. The track is correctly tensioned when a sagging (A) of 100...105 mm (rubber tracks), see chapter 7.

Document Title:	Function Group:	Information Type:	Date:
Design	**443**	**Service Information**	**2014/4/3 0**
Profile:			

Design

The rotary oil distributor consists of a hub (5), a shaft (6), a seal (7) and a cover (12).

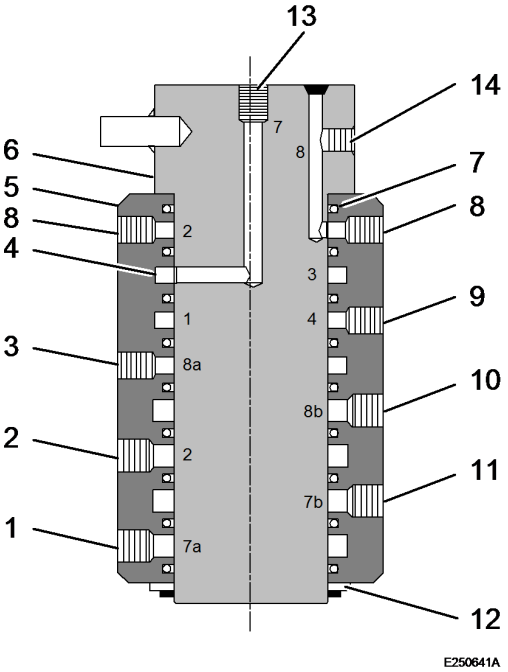

Figure 1

1. Travel gear motor, left hand side (1)
2. Travel gear motor, left hand side (2)
3. Dozer blade cylinder (6a)
4. Return flow line (7a)
5. Hub
6. Shaft
7. Seal
8. Travel motor, left (8a)
   Line for high speeds (8b)
9. Return flow line (7a)
10. Travel gear motor, right hand side (4)
11. Travel gear motor, right hand side (3)
12. Cover
13. Return flow port (7)
14. Connection for high speed (8)

The hub is provided with oil grooves to control the oil flows. The shaft contains channels to supply the hub with oil. The seal prevents oil leaks between shaft and hub.

Document Title:	Function Group:	Information Type:	Date:
Function	**443**	**Service Information**	**2014/4/3 0**
Profile:			

Function

Oil is delivered to the control valve on the rotary oil distributor, flows through the vertical ports in the shaft to the left and right hand travel motors to drive these motors.

The hub unit (5) is connected with the lower frame and the shaft (6) rotates with the superstructure.

The oil flows through the circumferential grooves and the oil flow is therefore not disturbed by the slewing movements of the machine.

Many thanks for your purchase.
Happy every day.

Document Title: **Frame, technical data**	Function Group: **710**	Information Type: **Service Information**	Date: **2014/4/3 0**
Profile:			

Frame, technical data

Item		**Unit**	**Specification**
			Rubber tracks
Length of lower frame		mm	1045
Joint distance		mm	-
Number of links		pcs.	34
Number of track supporting idlers		pcs.	0
Number of track rollers		pcs.	6
Tension spring	Type	–	Hydraulic adjustment (grease)
	Spring, adjustment length	mm	140
	Adjustment force	kg	1300
Track drive	Number of teeth	pcs.	14
	Pitch diameter	mm	-
Track pads	Number of track pads	pcs.	34
	Width of track pad	mm	230

Document Title:	Function Group:	Information Type:	Date:
General description	**710**	**Service Information**	**2014/4/3 0**
Profile:			

General description

The compact excavator consists of a crawler unit frame ([Invalid linktarget] /1) and a slewable superstructure ([Invalid linktarget] /2) in welded design, which are connected by a totally enclosed live ring ([Invalid linktarget] /3).
The slewing superstructure carries operator"s stand, engine and excavating equipment.

The live ring with internal gearing is driven by a hydraulic motor.
In case of a leak or damage of a circuit component the slewing facility is automatically braked.

The crawler unit frame carries the dozer blade and the associated hydraulic equipment.

Two rubber crawler tracks mounted to the crawler unit frame facilitate the travel movement of the machine. The tracks are driven by a gear motor each.

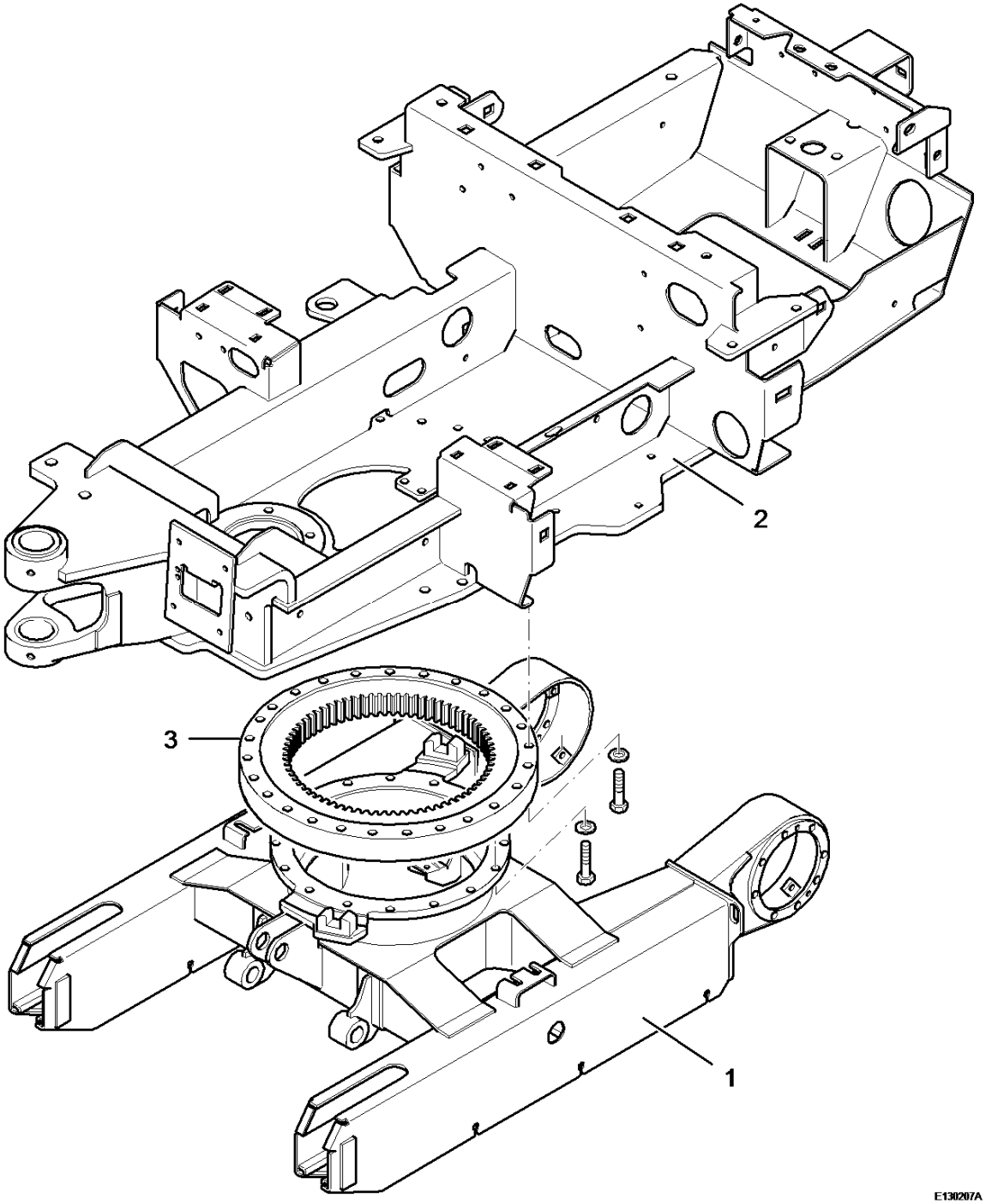

Figure 1

1	Main chassis
2	Slewing superstructure
3	Live ring

Document Title:	Function Group:	Information Type:	Date:
Live ring, tightening torques	**710**	**Service Information**	**2014/4/3 0**
Profile:			

Live ring, tightening torques

Live ring	
Screws - live ring	140 ±25 Nm

Document Title:	Function Group:	Information Type:	Date:
Assembling the cylinder for adjustable track width	**718**	**Service Information**	**2014/4/3 0**
Profile:			

Assembling the cylinder for adjustable track width

Op nbr

1. Take out the cylinder ([Invalid linktarget] /3) for track width adjustment.

2. Knock the stub axle (2) ([Invalid linktarget] and [Invalid linktarget]) into piston and piston rod sides.

3. Turn in screws (1) ([Invalid linktarget] und [Invalid linktarget]) and tighten with 105 ± 20 Nm.

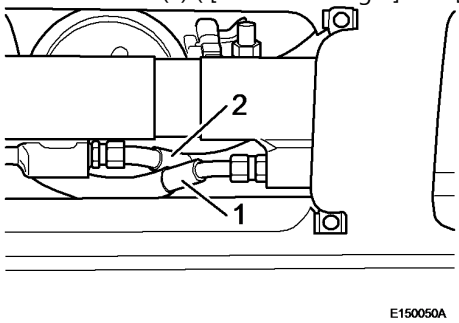

Figure 1

NOTE!
Remove all plugs before connecting the hydraulic lines.

4. Connect hydraulic lines (1 and 2), align correctly and tighten with 18 ± 4 Nm.

5. Check hydraulic oil level, top up if necessary

6. Start the engine, check the function of the machine and check for leaks.

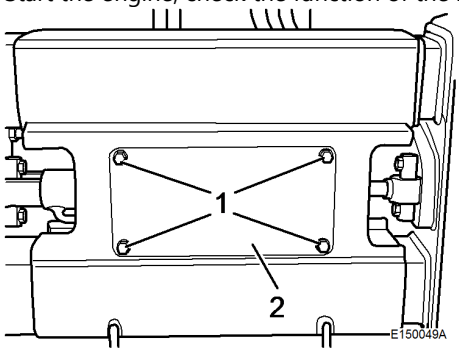

Figure 2

7. Attach cover (2), turn in screws (1) and tighten with 60 ± 10 Nm.

Document Title:	Function Group:	Information Type:	Date:
Assembling the superstructure	**718**	**Service Information**	**2014/4/3 0**
Profile:			

Assembling the superstructure

Op nbr

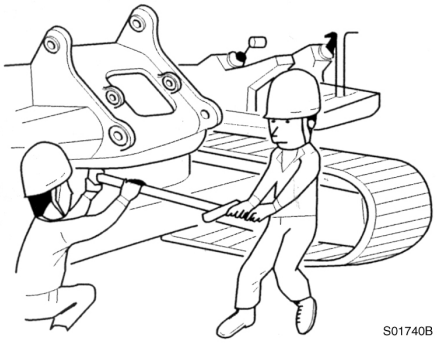

Figure 1
Assembling the superstructure

1. Tie the hoses connected to the rotary oil distributor together and fasten them upright.

2. Cover screws and threaded bores on the live ring with screw retention agent.

3. Lift up the superstructure and lower it onto the life ring.
   Lower the superstructure so that the pinio0n engages in the live ring.
   Tighten screws crosswise with 140 ± 25 Nm.

4. Connect the hoses. Reinstall the screw of the rotary oil distributor and the cover.

5. Install roll over protection structure and engine cover.

Document Title:	Function Group:	Information Type:	Date:
Removing the cylinder for adjustable track width	**718**	**Service Information**	**2014/4/3 0**
Profile:			

Removing the cylinder for adjustable track width

Op nbr

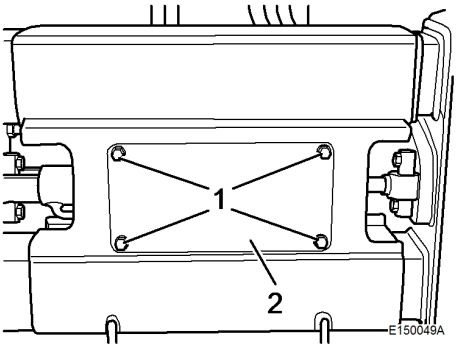

Figure 1

1. Lower the working attachment to the ground.
2. Shut down the engine and move the control lever to all directions to relieve the residual pressure.
3. Unscrew screws (1) and take off cover (2).

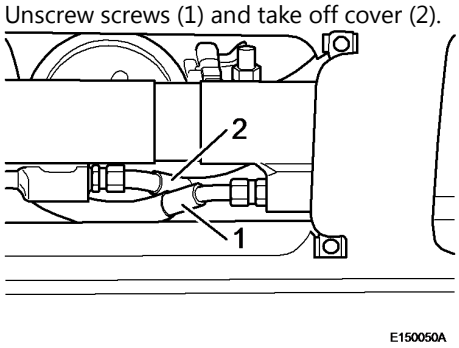

Figure 2

4. Mark hydraulic lines (1 and 2), unscrew the spigot nuts and lay the lines to the side.

NOTE!
Close all lines and openings withz clean caps and plugs.

WARNING
Catch hydraulic fluid and dispose of environmentally.

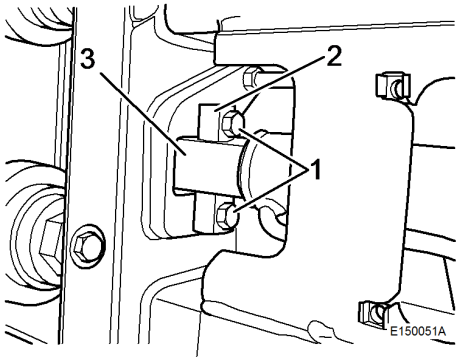

Figure 3
Piston side

5. Unscrew screws (1).

6. Knock the stub axle (2) out of piston and piston rod sides.

7. Take out the cylinder (3) for track width adjustment.

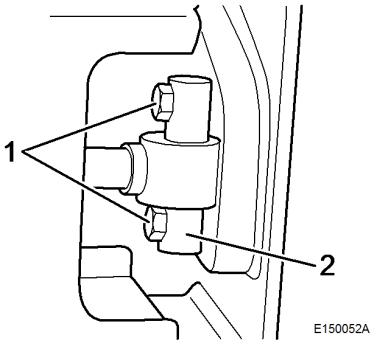

Figure 4
Piston rod side

Document Title:	Function Group:	Information Type:	Date:
Removing the superstructure	**718**	**Service Information**	**2014/4/3 0**
Profile:			

Removing the superstructure

Op nbr

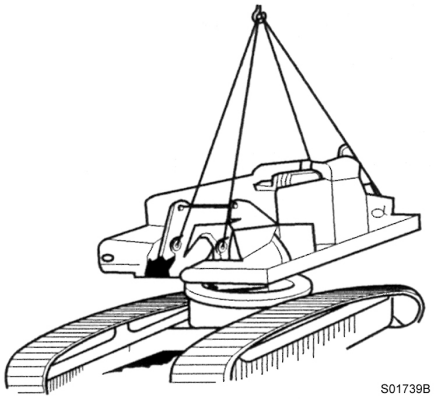

Figure 1
Lifting the superstructure

WARNING

The superstructure has a weight of approx. 225 kg (without counter weight and working attachment). Before starting to disassemble or assemble the superstructure make sure the excavator is safely parked and the area around is safe.

1. Remove the working attachment.

2. Remove roll over protection structure and engine cover.

3. Unscrew the screw for the rotary oil distributor, remove the cover and the hydraulic hoses from the rotary oil distributor.
   NOTE!
   Mark the hoses and tie them together. Close all disconnected hoses and pipes with plugs.

4. Fasten a steel rope to the superstructure. Lift the crane until the steel rope is tight.

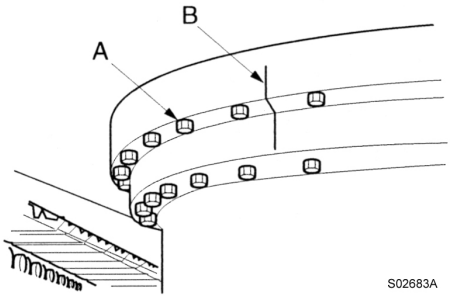

Figure 2
Assembled live ring

A. Screw
B. Check the alignment of the positioning marks

5. Unscrew the screws (A) connecting outer race and live ring.

6. Lift the superstructure slightly up and then lift it completely off while observing all safety precautions.

Document Title:	Function Group:	Information Type:	Date:
Adjusting the track sagging	**775**	**Service Information**	**2014/4/3 0**
Profile:			

Adjusting the track sagging

Op nbr

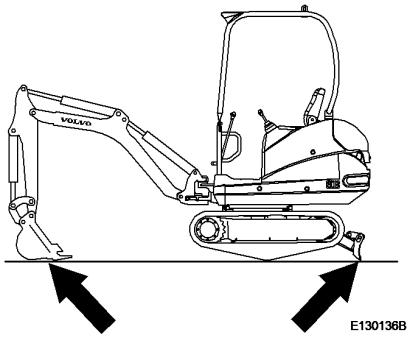

Figure 1
Lifting the excavator

1. Swivel the superstructure to the side and lift up the track by lowering the boom.

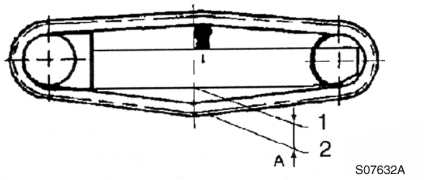

Figure 2
Measure the sagging of the track

1. Bottom side of frame
2. Top side of track link

2. Run the track several times forward and reverse. Stop the track during reverse movement.

3. Measure the sag (A) in the middle of the crawler frame between track pad and track roller mounting face.

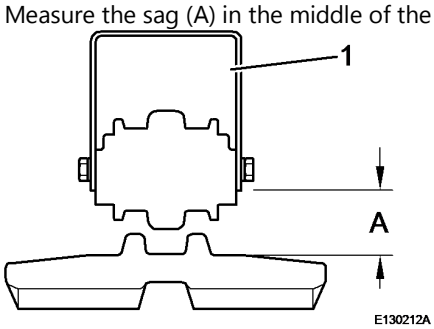

Figure 3

1. Rubber track

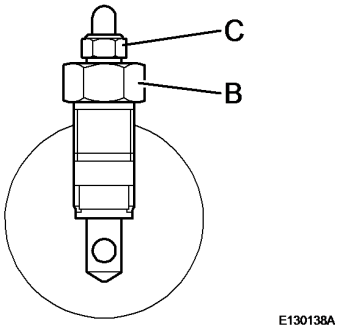

Figure 4

WARNING

The grease in the track adjustment cylinder is under high pressure. Do not remove the nipple or the valve unit to remove the grease.

Never loosen the valve for more than 2 turns as otherwise it will be thrown out together with the grease.

Do not stand near the guiding sprocket, because the track tensioning device may drop down.

4. In order to reduce sagging of the track press multi-purpose grease through grease nipple (C) into the adjustment cylinder. In order to increase sagging of the track loosen the valve unit (B) by one revolution, so that the grease can be drained off. Tighten the valve unit when the sag is correct.

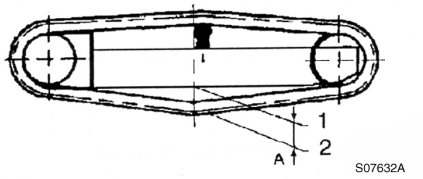

Figure 5
Measure the sagging of the track

1. Bottom side of frame
2. Top side of track link

CAUTION

If the piston in the track tensioning cylinder does not move replace the valve unit, repair or replace the cylinder.

5. Adjust the track sagging. See following table.
Track sagging, rubber track

Soil condition	**Distance (A)** **mm**
Any	60...65

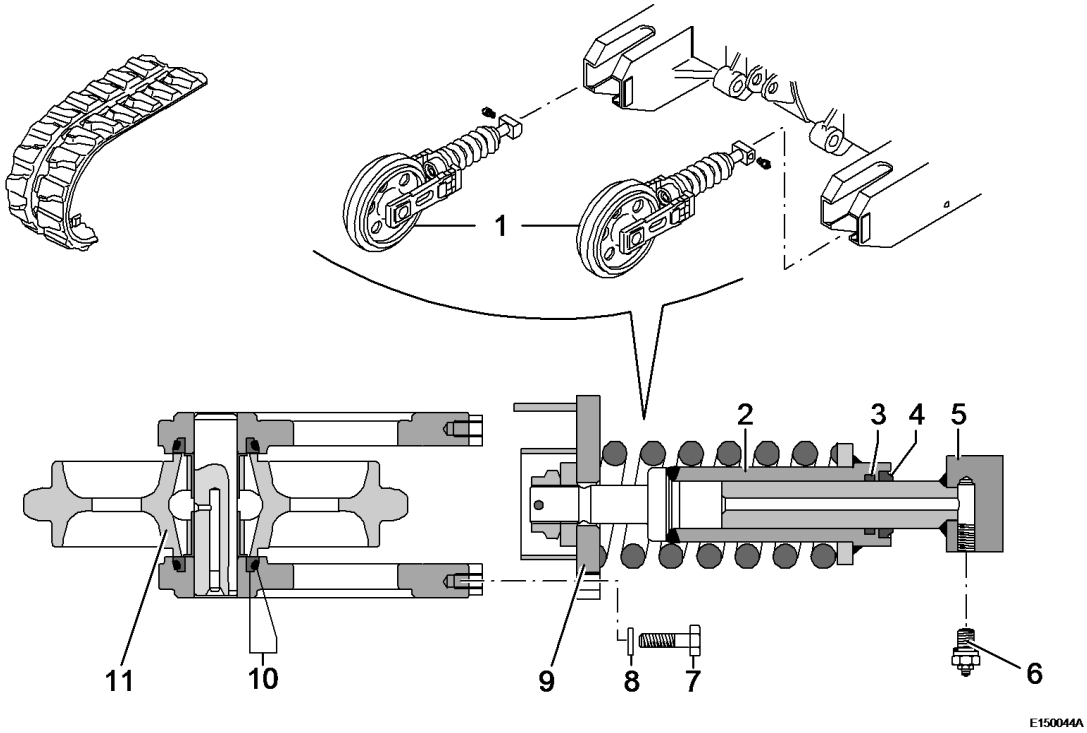

Figure 6

1 Track tensioning device
2 Cylinder
3 Seal
4 Seal
5 Piston
6 Valve
7 Screw
8 Washer
9 Spring block
10 Seal
11 Idler pulley

Track tensioning device

Document Title:	Function Group:	Information Type:	Date:
Assembling the guide sprocket	**775**	**Service Information**	**2014/4/3 0**
Profile:			

Assembling the guide sprocket

Op nbr

Wire rope 1.5 m

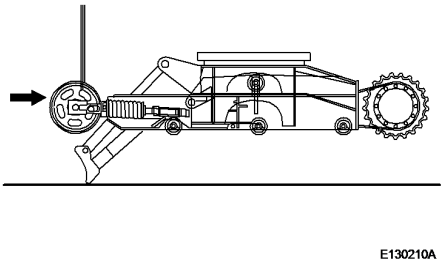

Figure 1
Installing the guide sprocket unit

1. Tighten connecting screws ([Invalid linktarget] /1) for guide sprocket and spring pack.

2. Sling a wire rope around the spring pack holder, lift up the guide sprocket unit, then attach the sliding shoe and slide it into the groove on the crawler frame.

   CAUTION

   Make sure that the cast recess on the piston end of the spring pack is located in the crawler frame bore.

   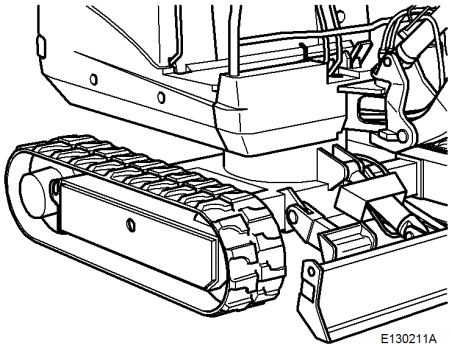

   Figure 2
   Assembling the rubber track

3. Install the rubber track, see [Invalid linktarget] .

4. Adjusting the track sagging, see [Invalid linktarget] .

VOLVO
Construction Equipment

Service Information

Document Title:	Function Group:	Information Type:	Date:
Assembling the rubber track	**775**	**Service Information**	**2014/4/3 0**
Profile:			

Assembling the rubber track

Op nbr

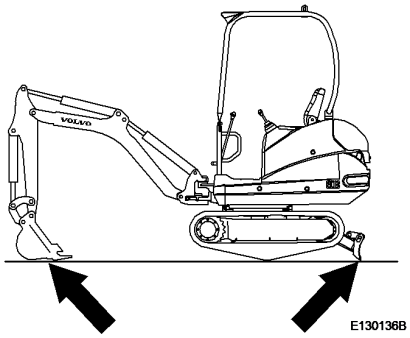

Figure 1
Lowering the excavator

1. Lay the rubber track onto track drive and guide sprocket.
2. Run the rubber track several times forward and backward and stop the track in backward movement.
3. Adjust the sag of the rubber track.
4. Lower the superstructure by lifting the boom.

Document Title:	Function Group:	Information Type:	Date:
Assembling the sliding bar	**775**	**Service Information**	**2014/4/3 0**
Profile:			

Assembling the sliding bar

Op nbr

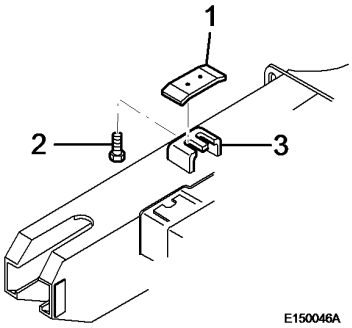

Figure 1
Assembling the sliding bar

1. Clean the contact face on the frame.
2. Turn both screws (2) into the sliding bar (1).
3. Insert the slide bar into holding device (3) on the frame and tighten the screws with 60 ± 10 Nm.
4. Adjust the track sagging.

Document Title:	Function Group:	Information Type:	Date:
Drive sprocket	**775**	**Service Information**	**2014/4/3 0**
Profile:			

Drive sprocket

Removing the track drive

Op nbr

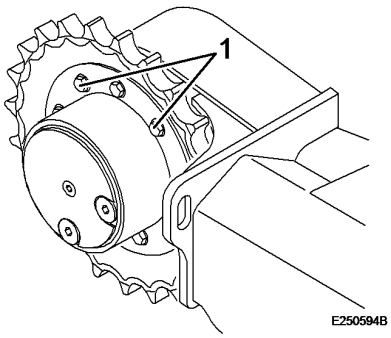

Figure 1

1. Remove the rubber track, see [Invalid linktarget] .
2. Place a wooden block between track and lower frame. Position the lower frame on the block to be able to lift the track drive off the track.
3. Unscrew the track drive fastening screws (1) with a socket wrench.

Assembling the track drive

Op nbr

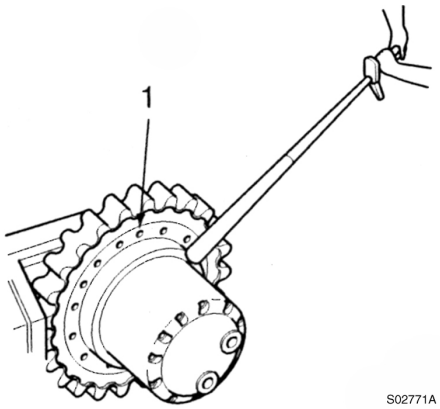

Figure 2
Screws

Assembly must be performed in reverse order.

1. Attach the track drive to the travel motor housing.
2. Slightly cover screws (1) with screw retention agent and tighten with 95 Nm.
3. Install the rubber track, see [Invalid linktarget] .
4. Adjusting the track sagging, see [Invalid linktarget] .

Document Title:	Function Group:	Information Type:	Date:
Removing the guide sprocket	**775**	**Service Information**	**2014/4/3 0**
Profile:			

Removing the guide sprocket

Op nbr

Wire rope 1.5 m

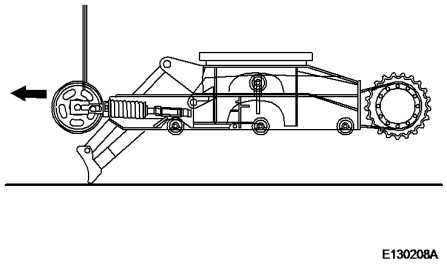

Figure 1
Remove the guide sprocket unit

1. Raise the machine with the dozer blade and support it with wooden blocks [Invalid linktarget] .
2. Remove the rubber track, see [Invalid linktarget] .
3. Sling a rope around the track spring holder, lift up the guide sprocket unit and push the holder out of the crawler frame with a prybar.

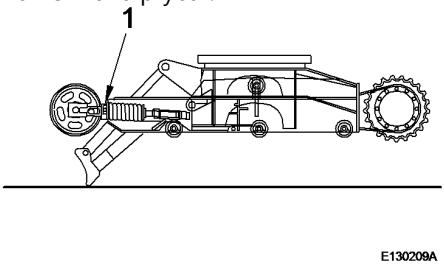

Figure 2
Unscrew connecting screws

4. Unscrew connecting screws (1) from guide sprocket and spring pack.

Document Title: **Removing the rubber track**	Function Group: **775**	Information Type: **Service Information**	Date: **2014/4/3 0**
Profile:			

Removing the rubber track

Op nbr

WARNING

The grease in the track adjustment cylinder is under high pressure. Do not remove the nipple or the valve unit to remove the grease.

Never loosen the valve for more than 2 turns as otherwise it will be thrown out together with the grease.

Do not stand near the guiding sprocket, because the track tensioning device may drop down.

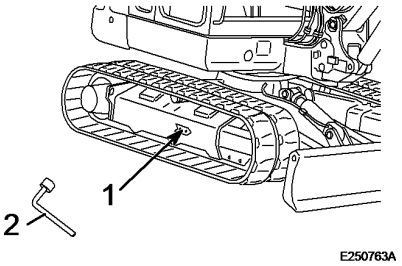

Figure 1
Slackening the track tensioning valve

1. Slacken the tensioning valve for 1 turn and drain off grease in order to reduce the tension.

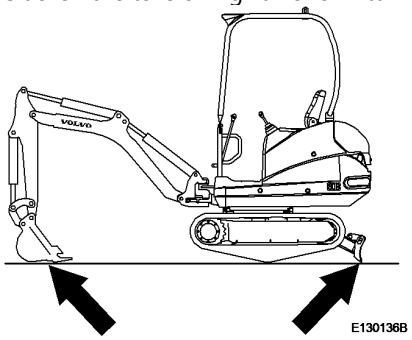

Figure 2
Lifting the excavator

2. Swivel the superstructure to the side and lift up the rubber track by lowering the boom.

3. Take the rubber track off track drive and guide sprocket.

VOLVO
Construction Equipment

Service Information

Document Title:	Function Group:	Information Type:	Date:
Removing the sliding bar	**775**	**Service Information**	**2014/4/3 0**
Profile:			

Removing the sliding bar

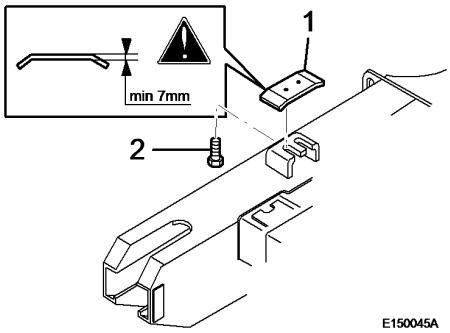

Figure 1
Remove the sliding bar

Op nbr

1. Increase the track sagging, see [Invalid linktarget] .
2. Slacken screws (2) and take off sliding bar (1).
3. Replace sliding bar (1) if the min. thickness of 7 mm is reached.

VOLVO
Construction Equipment

Service Information

Document Title:	Function Group:	Information Type:	Date:
Track drive, wear measurement	**775**	**Service Information**	**2014/4/3 0**
Profile:			

Track drive, wear measurement

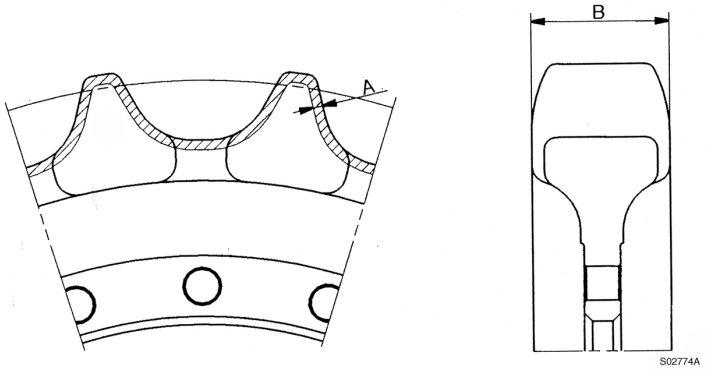

Figure 1
Track drive

Wear limit, unit: mm

Symbol	**Item**		**Specification**	**Remedy**
A	Wear limit on teeth of track drive hub		3	Replace
B	Width of track drive	Specified dimension	-	
		Permissible value	23	
C	Number of teeth		21 pcs.	-

Document Title:	Function Group:	Information Type:	Date:
Track roller	**775**	**Service Information**	**2014/4/3 0**
Profile:			

Track roller

Removing the track roller

Op nbr

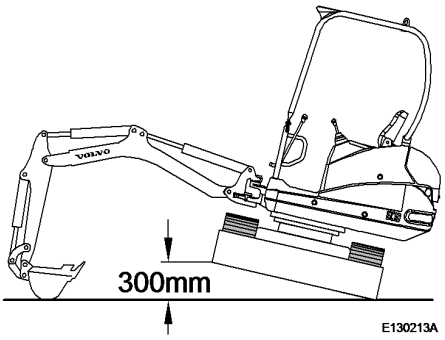

Figure 1
Lifting the machine

1. Relieve the track, see [Invalid linktarget] .
2. Lift the machine approx. 300 mm off the ground, as shown.
3. Place a wooden block under the track roller and unscrew the fastening screws (1).
4. Pull out the track roller.
   NOTE!
   The removal and installation of the track roller is identical for steel and rubber tracks.

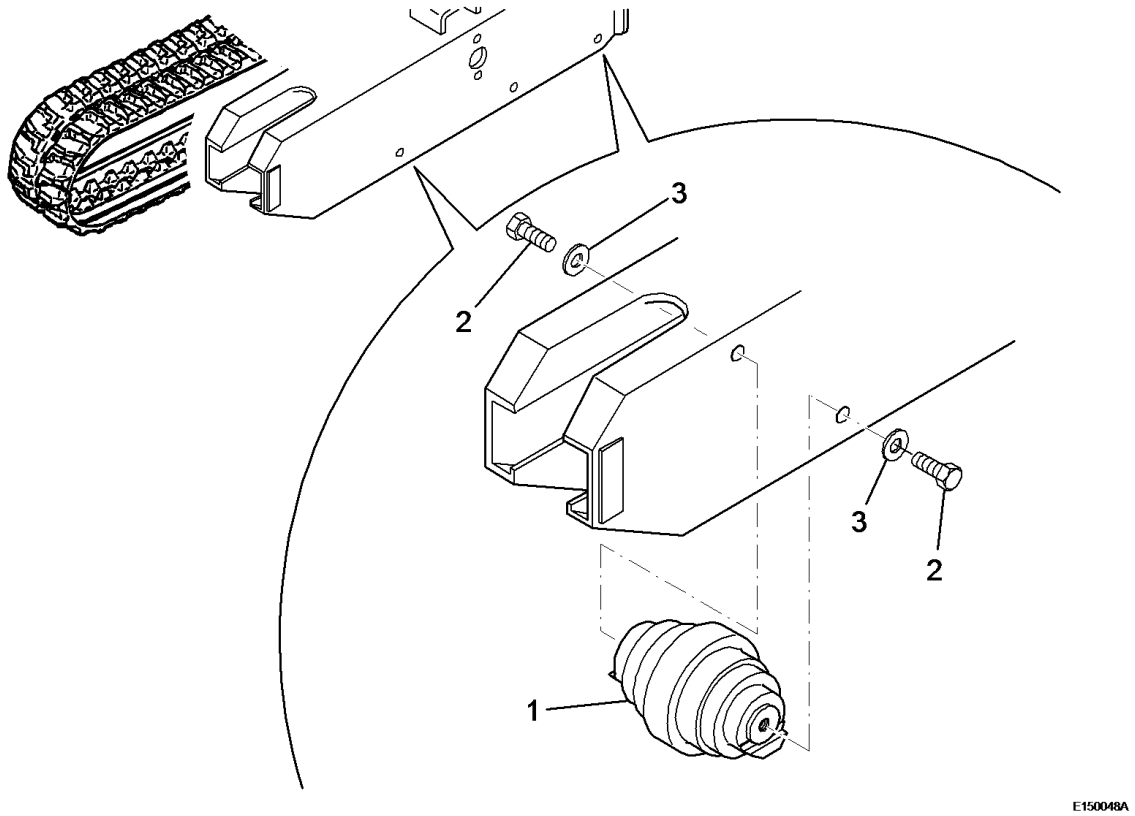

Figure 2
Removing the track roller

1 Track roller
2 Screw
3 Washer

Installing the track roller

Op nbr

1. Assemble new track roller (1) and align the bore in the lower frame to the bore in the track roller.
2. Insert screw (2) with washer (3) and tighten with 60 ± 10 Nm.
3. Adjust the sag of the track and lower the machine to the ground.

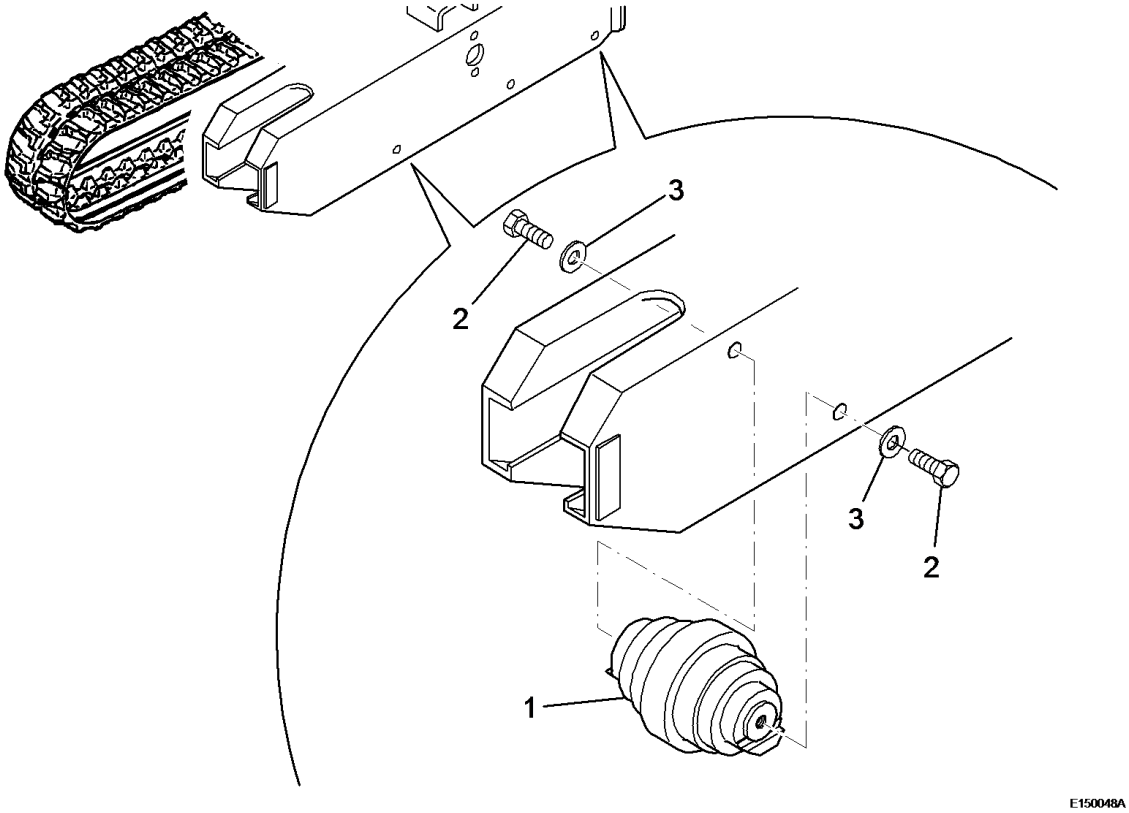

Figure 3
Installing the track roller

1 Track roller
2 Screw
3 Washer

Many thanks for your purchase.
Happy every day.

Document Title:	Function Group:	Information Type:	Date:
Hydraulic components, cleanliness during handling	**900**	**Service Information**	**2014/4/3 0**
Profile:			

Hydraulic components, cleanliness during handling

WARNING

Pressurized or hot hydraulic oil can cause severe injury.

CAUTION

It is of utmost importance to keep the hydraulic system free of contaminants, since this would cause abnormal wear and therefore expensive downtimes of the machine. When handling hydraulic components and hydraulic oil strict cleanliness is mandatory.

NOTE!

When performing operations in the hydraulic system you should use a vacuum pump.

Document Title:	Function Group:	Information Type:	Date:
Hydraulic oil, description	**900**	**Service Information**	**2014/4/3 0**
Profile:			

Hydraulic oil, description

The machine is filled with minerfal oil based hydraulic oil as standard, biodegradable oil can optionally also be used.

The hydraulic oil contains selected additives which provide excellent oxidation stability, protection against foaming, corrosion protection and good lubrication properties as well as compatibility with lead containing bearings.

Document Title:	Function Group:	Information Type:	Date:
Hydraulic oil, storage and handling	**900**	**Service Information**	**2014/4/3 0**
Profile:			

Hydraulic oil, storage and handling

- Hydraulic oil must be stored in tightly closed tanks or in drums.
- Only tanks or drums used for the transport of hydraulic oil should be used for the purpose of storage.
- The oil should be stored under a roof or in temperature controlled rooms. For outside storage the drums must be laid down in order to avoid the entering of water and the fading of the identification on the drums.
- In order to avoid condensation the oil must not be stored in temperatures higher than 60 °C, it must also not be subjected to excessive radiation of sunlight or temperatures below zero.

Document Title:	Function Group:	Information Type:	Date:
Hydraulic parts, storage and transport	**900**	**Service Information**	**2014/4/3 0**
Profile:			

Hydraulic parts, storage and transport

- All hydraulic parts must be stored in plastic bags or foil and closed with plugs. The packaging must only be removed when the part is going to be used.
- The service van should always be equipped in a way that it is easy to organize and clean.
- Each service van should be furnished with a roll of plastic foil, plastic dowels of common dimensions and a plastic container for components.

Document Title: **Hydraulic system, description**	Function Group: **900**	Information Type: **Service Information**	Date: **2014/4/3 0**
Profile:			

Hydraulic system, description

The hydraulic system consists of several components, which together form a complete system. Descriptions of the individual components can be found in their corresponding sections.

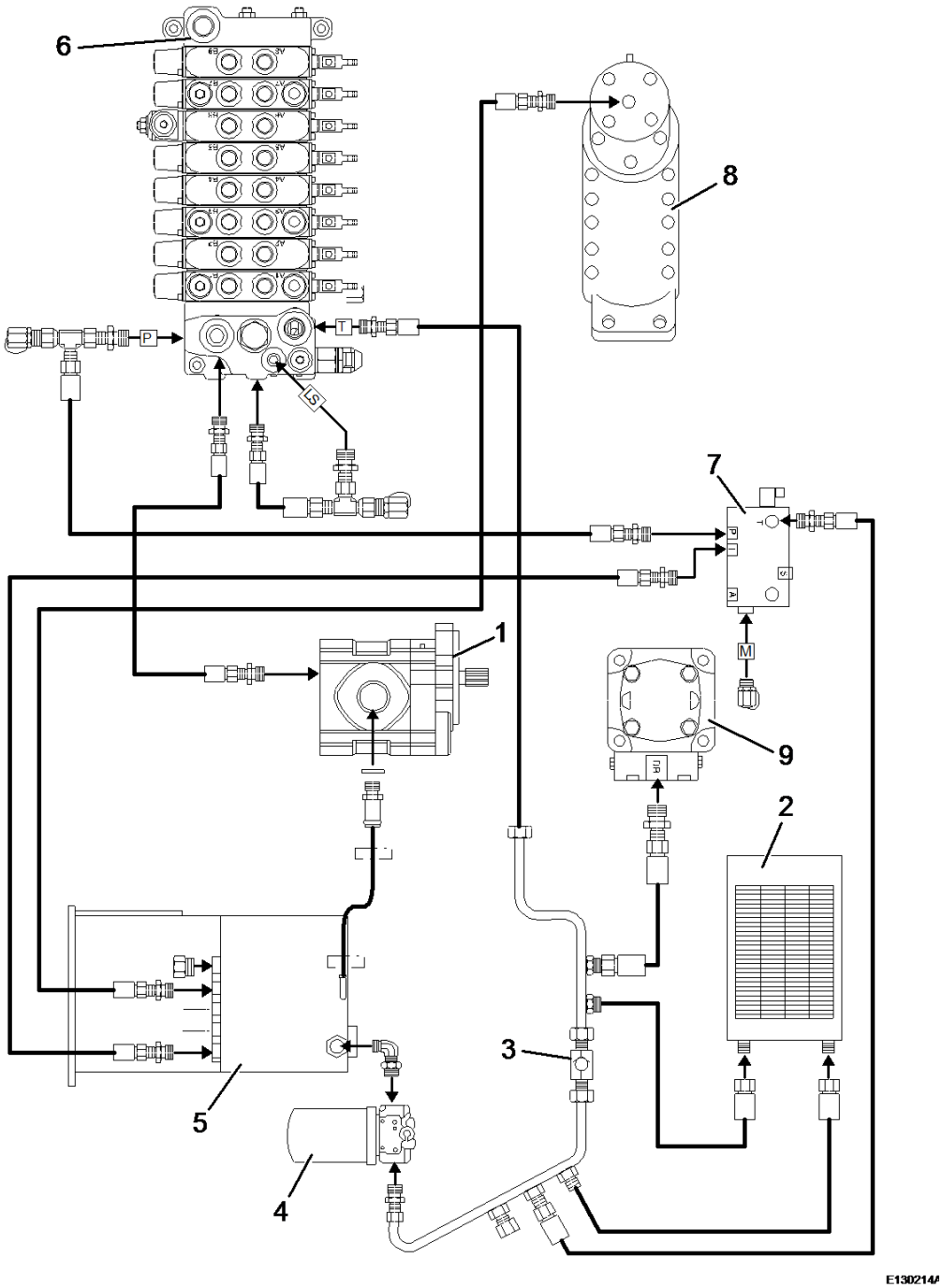

Figure 1

1 Hydraulic pump
2 Oil cooler
3 By-pass valve
4 Oil filter
5 Hydraulic oil tank
6 Control valve block with 8 elements
7 Hydraulic servo valve block 2nd gear
8 Rotary distributor
9 Gear motor

Document Title:	Function Group:	Information Type:	Date:
Adjusting the pressure and checking for leaks	**910**	**Service Information**	**2014/4/3 0**
Profile:			

Adjusting the pressure and checking for leaks

WARNING

Work on the equipment or in the area of hydraulic components must only be performed by persons who have sufficient knowledge and experience in handling hydraulic systems. The following safety rules must generally be observed when working on the hydraulic system of the machine.

1. Depressurize all system sections and pressure lines to be removed before starting repair work. Observe all specific notes applicable for the respective unit.
2. Make sure that nobody can operate the machine as long as work is being performed on the machine.
3. Avoid contact with hot and/or pressurized hydraulic oil. Always close access doors to service points before pressurizing the system in order to protect persons from hydraulic oil jets, which may be dangerous even under considerably low pressures.
4. Use pressure gauges with long test hoses so that the pressure can be read at a safe distance. Make sure that these measuring hoses are not pinched in doors.
5. The first lever or pedal movement should be performed slowly to prevent sudden or unexpected machine movements and pressures in excess of the specified pressures. Interrupt the pressure increase when the machine has reached the specified pressure. Do not try to exceed the specified limit value.
6. When using adjustment devices with unknown sensitivity adjust the pressure in small increments. This is of special importance for the auxiliary hydraulic circuit in which the pressure builds up immediately when starting the engine. It has happened that the pressure increased to such a level, that the pressure gauge turned around a second time. The pressure was thereby wrongly read as being too low. It was increased further and finally caused the system to burst.
7. Check all lines, pipes and screwed connections regularly for external leaks and damage. Repair any damage immediately.
8. Splashed oil may cause injury. Watch out for oil leaks. Oil on the inside of a door may be a sign for an oil leak occurring during pressure build up. Use a piece of paper or cardboard (not your hands!) to check for possible leak oil losses.
9. Check the pressure testing equipment at regular intervals and replace defective parts.
10. Make sure that no connections are mixed up by mistake. Connections, length and quality of hoses must comply with the technical requirements.

Document Title:	Function Group:	Information Type:	Date:
General notes to be observe when working on the hydraulic system	**910**	**Service Information**	**2014/4/3 0**
Profile:			

General notes to be observe when working on the hydraulic system

The operating safety, productivity and lifetime of a machine depends mainly on the proper use and regular maintenance of the machine.

To ensure an optimal performance of the machine all information and instructions concerning the type and frequency of maintenance activities and lubrication mentioned in this instruction manual must be strictly observed and applied. Claims covered by warranty can only be accepted if all specified inspections have been performed according to schedule and by trained specialists.

It is highly recommended to use only genuine spare parts, which are available from authorized VOLVO dealers. Repairs and adjustments must only be performed by qualified and trained mechanics from these authorized dealers or VOLVO sales subsidiaries.

The machine described in these instructions complies with the technical regulations valid at the date of issue. We reserve the right to implement any changes or modifications to machine components deemed useful or necessary at any time without prior notification. This does not include the obligation to change the content of this manual accordingly. Illustrations and information contained in this manual are not binding and cannot be subject of any claims.

Safety guidelines to be observed during service and repair work

The engine must be shut down and the working attachment lowered to the ground or supported.

The pressure relief and safety valves in the hydraulic circuits of excavators may only be adjusted by VOLVO service personnel. Any changes to their adjustment will render the warranty null and void.

The service manual must always be close at hand when performing repair work. Beside the repair instructions all applicable legal regulations concerning the avoidance of accidents and the protection of the environment must also be observed.

Before starting work on the machine all service personnel involved in such repairs must have read this manual and should be acquainted with the operation of the machine and the different control functions. Before starting work all persons involved must have read the repair instructions and especially the chapter on safety. These notes must not be read while already performing this work. This applies especially for persons who are only occasionally involved in repairs on this machine.

These notes also deal with the handling of hazardous substances, the protective outfit of the personnel and the traffic regulations.

From time to time the workshop manager must check whether the personnel is sufficiently trained and performs all work in compliance with the repair instructions and is aware of the safety risks. Work on and with the machine must only be performed by sufficiently trained persons. Statutory minimum age limits must be strictly observed.

For safety reasons long hair must be tied back or otherwise secured. Clothes should be of tight fit. Jewellery that may be caught by the machine and cause injury must be taken off.

Wear special protective outfit if required by special circumstances or by legal regulations.

Observe all safety and warning notes on the machine. Make sure that all safety and warning signs are well legible at all times.

Do not make any modifications, additions or changes, which might affect the safety, without the written consent of the manufacturer. This also applies for the insulation and adjustment of safety devices and pressure limitation valves as well as for welding work on load bearing elements.

Replace the hydraulic hoses in the specified or convenient intervals, even if no safety affecting fault was found.

Perform inspections and maintenance work in the time intervals specified in the repair instructions.

Maintenance and repair work must only be carried out with suitable tools and requires appropriate workshop facilities.

The personnel must be informed about the location of fire fighting equipment and the respective operating instructions. In

case of a fire apply the correct warning and fire fighting methods. When refuelling shut the engine down, do not smoke and avoid open fire. Do not use the machine in an explosive environment. Work in such area can cause fire or explosion and result in severe injury.

Persons attending a training course may only work with the machine if they are permanently supervised by an experienced person.

Work on the equipment or in the area of hydraulic components must only be performed by persons who have sufficient knowledge and experience in handling hydraulic systems.

Persons under the influence of alcohol or drugs, which affect the responsiveness, are NOT permitted to work on the machine. Avoid any risky working methods.

Run combustion engines only adequately ventilated rooms. Ensure sufficient ventilation before starting the machine inside a closed room.

Start the machine only from the driver's seat. Before starting or moving the machine make sure that there are no persons inside the movement radius of the machine.

Before starting the machine you should generally make sure that all accessories are securely fastened.

Always keep your hands on the control levers while the machine is in motion.

If the machine has been shut down for repair or maintenance purposes preventive measures must be applied to avoid accidental starting. For this purpose lock all control elements and pull off the ignition key or attach a warning sign to the ignition switch.

Perform repair and maintenance work only when the machine is parked on level ground of sufficient load bearing capacity and all necessary measures have been applied to rule out tipping over or accidental starting of the machine.

In order to rule out accidents, large components or assembles, which must be removed to be replaced, must be carefully fastened and located with lifting tackle. Use only suitable and technically perfect lifting gear and lifting tackle of sufficient load bearing capacity.
Do not stand under loads being lifted.

Before performing maintenance and repair work remove all oil, fuel and dirt from the machine. This applies particularly for joints and connecting threads. Do not use any aggressive cleaning agents. Use only lint-free cloths. Before cleaning the machine with water, a steam jet (high pressure cleaner) or with a cleansing agent cover all openings which should normally be protected against water, steam and cleansing agents for reasons of safety or correct function. After cleaning check all fuel, lubrication oil and pressure fluid lines for leaks, loose connections, scratches and damage. Any defects found must be rectified immediately.

Tighten all bolted connections which were loosened for maintenance and repair work.

All safety devices removed for adjustment, maintenance or repair must be installed and checked again immediately after the work is completed.

Make sure that all consumables and replaced parts are disposed of environmentally.

Comply with the construction site regulations. Welding, torch cutting and grinding operations on the machine must only be performed if this has been expressly authorized, as there may be a risk of explosion or fire. Before performing welding, torch cutting and grinding operations clean the machine and its surrounding area to remove dust and inflammable substances. Ensure sufficient ventilation of the rooms (danger of explosion).

Document Title:	Function Group:	Information Type:	Date:
Changing the hydraulic oil filter	**911**	**Service Information**	**2014/4/3 0**
Profile:			

Changing the hydraulic oil filter

Op nbr

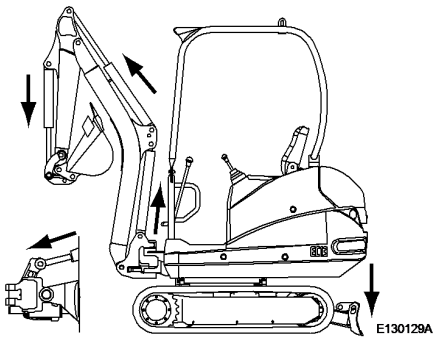

Figure 1

1. Actuate all cylinder to their end position. Shut down the engine and move the control levers for boom, dipper, bucket and accessories to all directions and relieve remaining pressure.

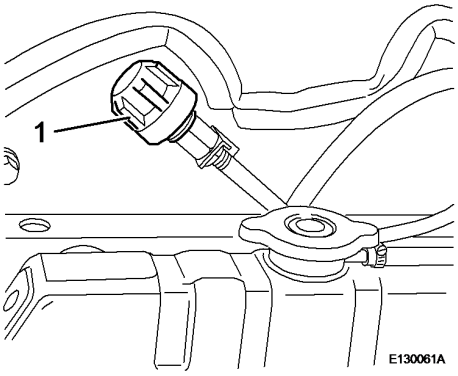

Figure 2

2. Remove and clean the breather (1).

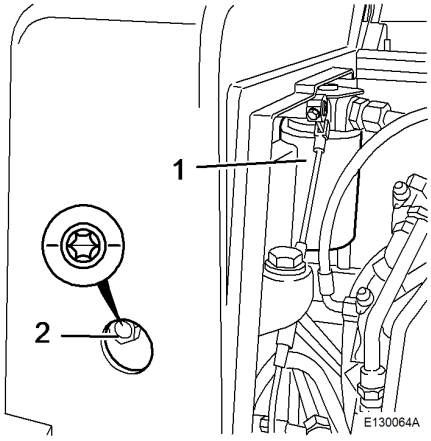

Figure 3

3. Unscrew the hydraulic oil filter (1).

WARNING

Dispose of the hydraulic oil filter (1) environmentally.

4. Apply some oil to the seal ring on the hydraulic oil filter and install the filter.

5. Assemble the breather ([Invalid linktarget] /1).

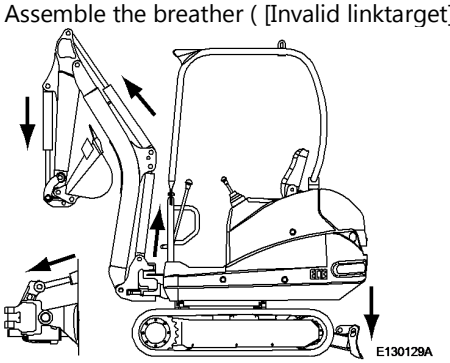

Figure 4

6. Move the control levers slowly to both directions to perform the working movements.

7. Check the oil filling level ([Invalid linktarget] /2).

8. Extend all cylinders to their end positions ([Invalid linktarget]), while the machine is standing on level ground. The oil level must now comply with the level shown in ([Invalid linktarget]).

9. Top up oil if necessary.

VOLVO
Construction Equipment

Service Information

Document Title:	Function Group:	Information Type:	Date:
Checking and adjusting the pressure relief valve	**912**	**Service Information**	**2014/4/3 0**
Profile:			

Checking and adjusting the pressure relief valve

Check

Remove the cap from pressure test ports P and connect a pressure tester.

Measurement

Start the engine and accelerate to maximum speed.

Raise the dozer blade cylinder against the end stop and hold it in this position.

The pressure tester must now indicate a pressure of ([Invalid linktarget]). Perform another movement to confirm.

This pressure test can also be performed on port LS.

WARNING

Change the pressure tester over to port LS and do not set to Δp.

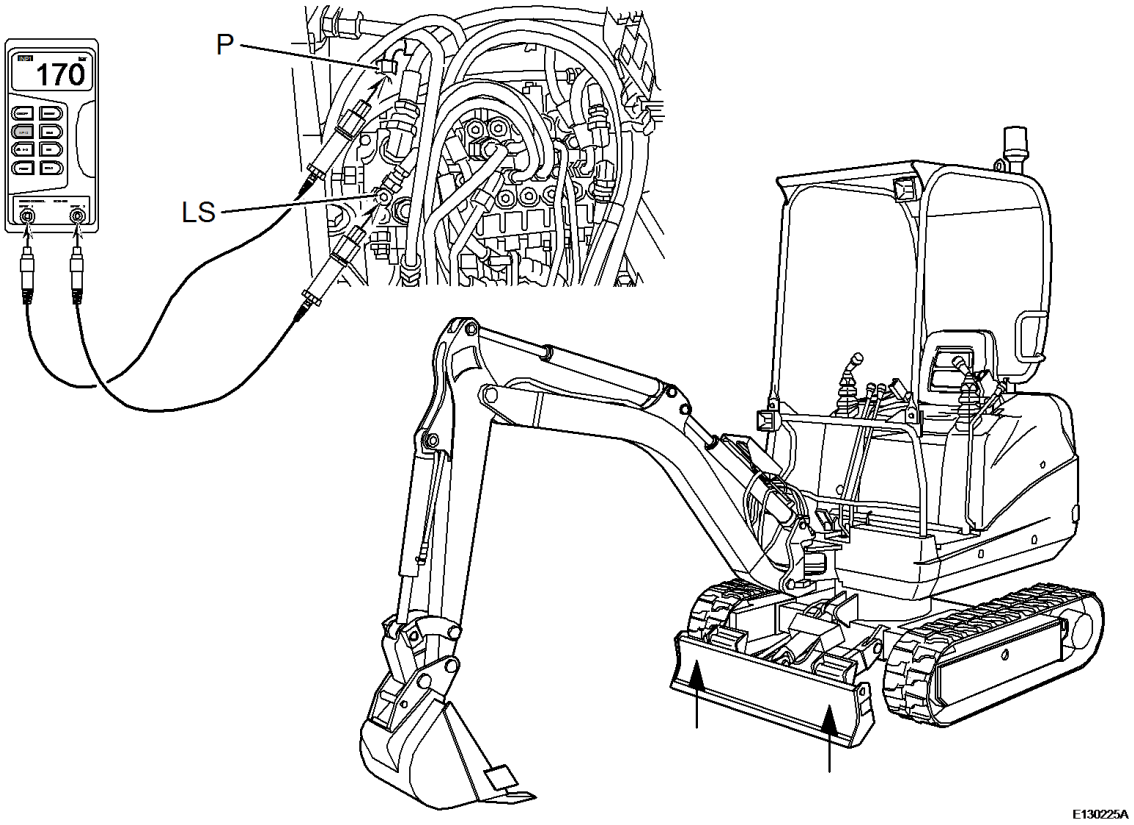

Figure 1

Document Title:	Function Group:	Information Type:	Date:
Control valve	**912**	**Service Information**	**2014/4/3 0**
Profile:			

Control valve

General

The control valves contain the necessary number of spools in form of a complete unit. The spools have the following functions:

- Inlet element
  (which can be coupled with a control element)
- Control elements
- Connecting modules
- Outlet element
  (which can be coupled with a control element).

The control elements are based on the 6-way principle.

Description of function

The spool position can be divided into three actuating phases:

I	Neutral	35% overlap
II	fine opening	20% travel
III	Open	45% travel

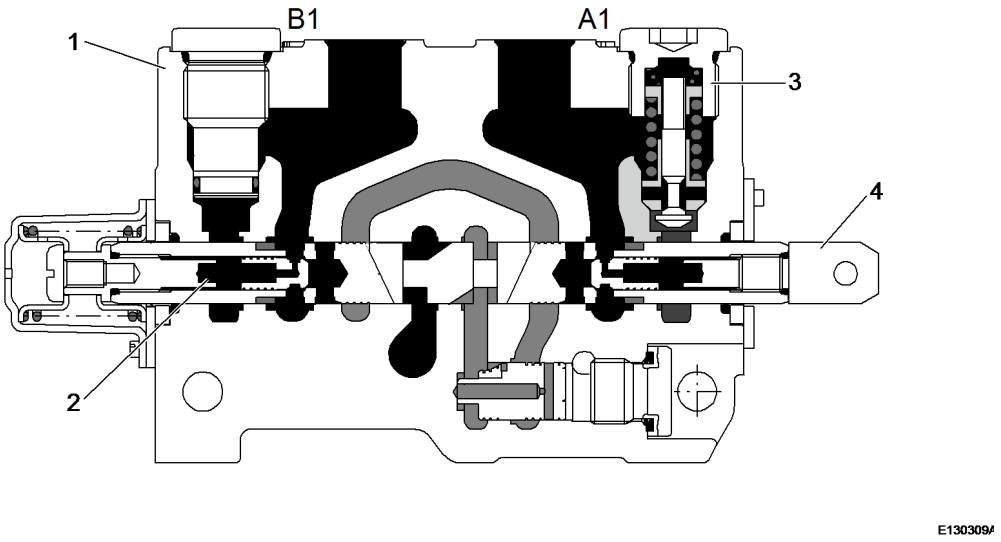

Figure 1

1. Housing
2. Overload check valve
3. Secondary pressure relief valve
4. Control spool

Document Title:	Function Group:	Information Type:	Date:
Control valve block for slewing gear Test and adjustment	**912**	**Service Information**	**2014/4/3 0**
Profile:			

Control valve block for slewing gear Test and adjustment

Measurement

Swivel the top carrier element (superstructure) and block it with the offset cylinder, while resting the bucket against the dozer blade.

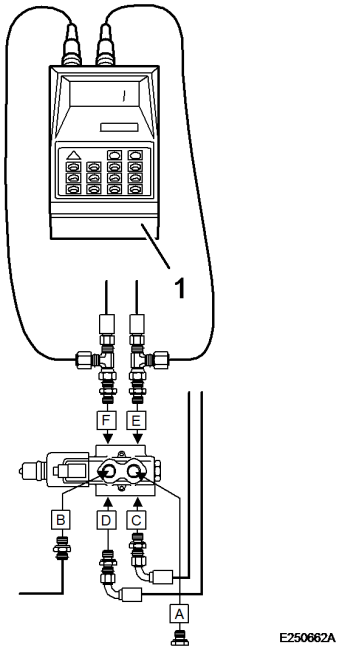

Figure 1
Pressure gauge

Remove both caps from the pressure test port ([Invalid linktarget]).
Connect the pressure tester (1) to the pressure test ports.

Test

Start the engine and accelerate to full speed.
Operate the slewing gear control lever until the left hand end position is reached. Read the DELTA P of 150 bar in the gauge.
Operate the slewing gear control lever until the right hand end position is reached. Read the DELTA P of 150 bar in the gauge.

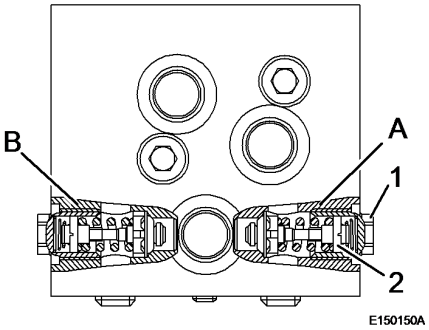

Figure 2

1. Counter nut
2. Screw

A. Pressure relief valve right hand side
B. Pressure relief valve left hand side

Adjustment

The DELTA P depends on the setting of the pressure relief valves (A and B - A for right hand side and B for left hand side) in the slewing gear control valve block.
Unscrew plug (1) (13 mm spanner) and regulate the setscrew (2) (with screwdriver).
Tighten screw (2) clockwise to INCREASE the DELTA P.
Loosen screw (2) anti-clockwise to REDUCE the DELTA P.

NOTE!

Perform this work on right and left hand side.

Remove pressure tester (1) and screw the caps back on to the pressure test ports.

Document Title:	Function Group:	Information Type:	Date:
Pressure relief valves	**912**	**Service Information**	**2014/4/3 0**
Profile:			

Pressure relief valves

Tests and adjustments of the pressure relief valves

In order to assure proper elimination of fault, inspection or adjustment the following precautions must be implemented when using the table of standard values.

The standard values in the table are based on several test results as well as standard values of the machine when it leaves the machine. Sie sind als Bezugswerte zu betrachten, die verwendet werden, um sich nach der Ausführung einer Störungsbeseitigung ein Urteil zu bilden.

These standard values cannot be used as standards to justify any claims. They should be applied under consideration of all ambient factors, in order to rule out any precipitated conclusions.

WARNING

Pressure relief valves must only be checked and adjusted by appropriately trained VOLVO service engineers, who are fully acquainted with the machine. If any settings are changed by persons who are not authorized for this work, the warranty will become null and void. During work the following safety regulations must generally be observed.

Avoid contact with hot and/or pressurized hydraulic oil. Always close access doors to service points before pressurizing the system in order to protect persons from hydraulic oil jets, which may be dangerous even under considerably low pressures.

Use pressure gauges with long test hoses so that the pressure can be read at a safe distance. Make sure that these lines and hoses are not pinched in doors.

The first lever or pedal movement should be performed slowly to prevent sudden or unexpected machine movements and pressures in excess of the specified pressures. Interrupt the pressure increase when the machine has reached the specified pressure. Do not try to exceed the specified limit value.

When using adjustment devices with unknown sensitivity adjust the pressure in small increments. This is of special importance for the auxiliary hydraulic circuit in which the pressure builds up immediately when starting the engine.

Document Title:	Function Group:	Information Type:	Date:
Stand-by pressure	**912**	**Service Information**	**2014/4/3 0**
Profile:			

Stand-by pressure

Test (stand-by pressure)

Remove the caps from pressure test ports (P and LS) and connect a pressure tester.

Measurement

Start the engine and accelerate to maximum speed.

Do not operate the joystick or any other function.

Check the stand-by pressure as pressure differential (Delta P) between high pressure side (P) and load sensing (LS) (pre-setting).

High pressure - LS pressure = Delta P

This pressure depends on the setting of the pressure control valve.

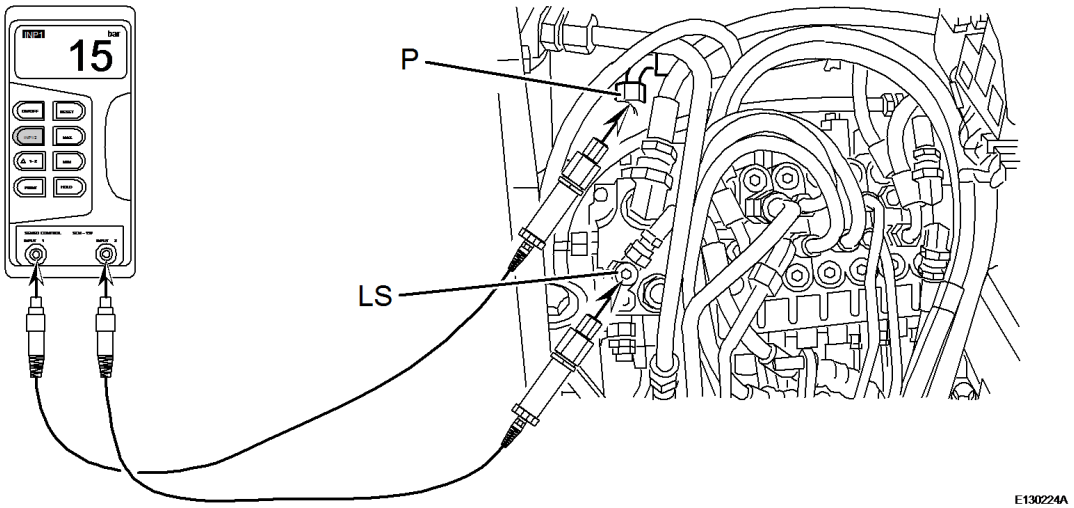

Figure 1

Document Title:	Function Group:	Information Type:	Date:
Valve block for slewing gear	**912**	**Service Information**	**2014/4/3 0**
Profile:			

Valve block for slewing gear

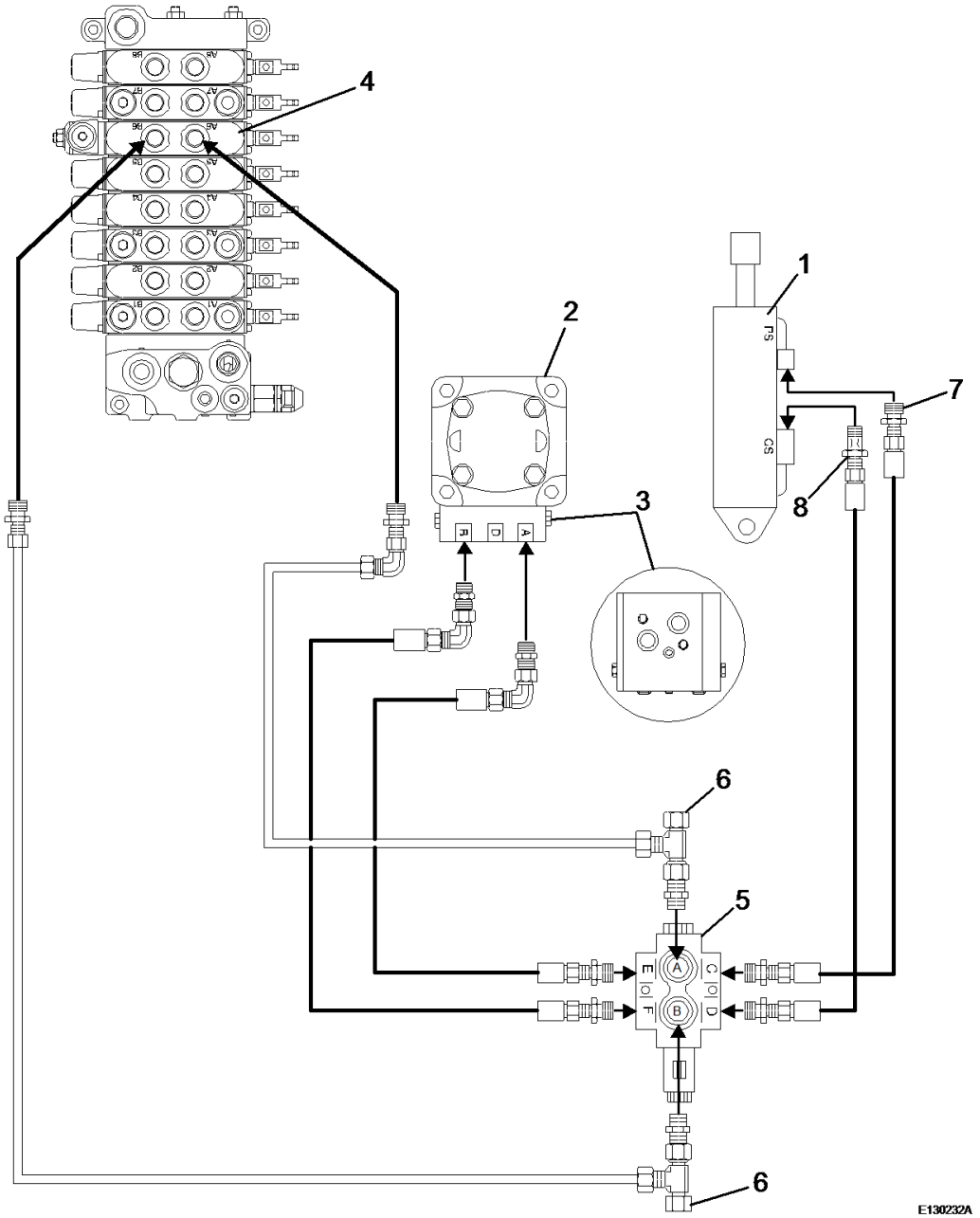

Figure 1

1. Offset cylinder
2. Hydraulic slewing motor
3. Control valve block for slewing gear
4. Control element for slewing gear - offset cylinder

5. Solenoid valve for slewing gear/offset
6. Pressure test port
7. Piston rod side (retract cylinder)
8. Piston side (extend cylinder)

Document Title:	Function Group:	Information Type:	Date:
Way valve, control valve	**912**	**Service Information**	**2014/4/3 0**
Profile:			

Way valve, control valve

Assignment of elements

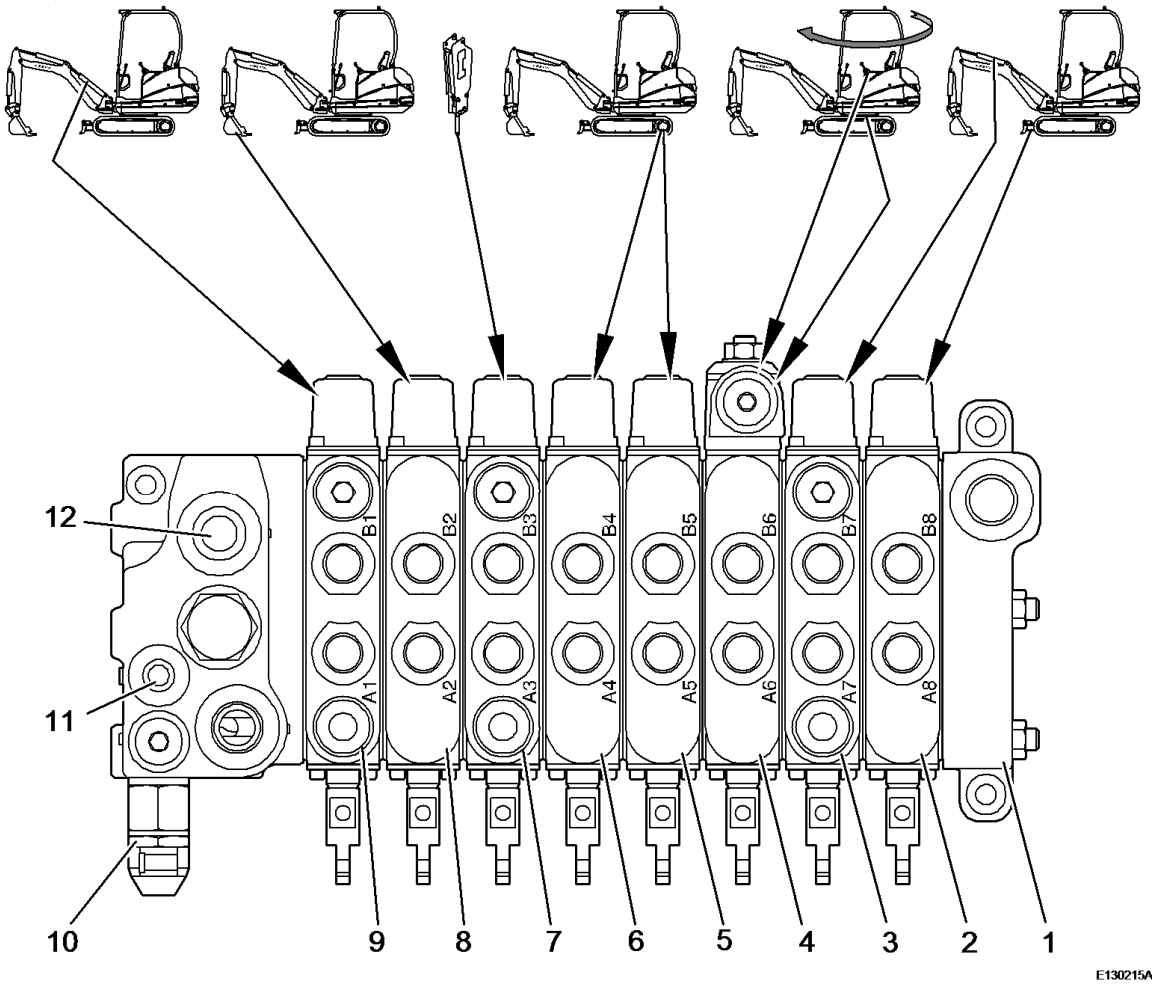

Figure 1
Oil distributor

1 Oil distributor
2 Control valve elements for dozer blade
3 Control valve element for dipper arm
4 Control valve element for slewing gear / offset
5 Control valve element for left-hand travel motor
6 Control valve element for right-hand travel motor
7 Control valve element for accessories
8 Control valve element for dipper
9 Control valve element for boom
10 Pressure relief valve (high pressure)
11 Load Sensing connection
12 Port P

Document Title:	Function Group:	Information Type:	Date:
Adjustment of secondary valves >Test and adjustment procedure	**912**	**Service Information**	**2014/4/3 0**
Profile:			

Adjustment of secondary valves

Measurement

Disconnect the hose from the control valve. Connect hand pump (P) with pressure gauge (A), 0 - 400 bar, to port A8 on the control valve block.

Test

Engine shut down. Operate the hand pump to increase the pressure to the required value. See technical data for adjustment value. When the adjusted safety pressure is reached the valve will open.

NOTE!
All secondary valves must be checked in the same way.

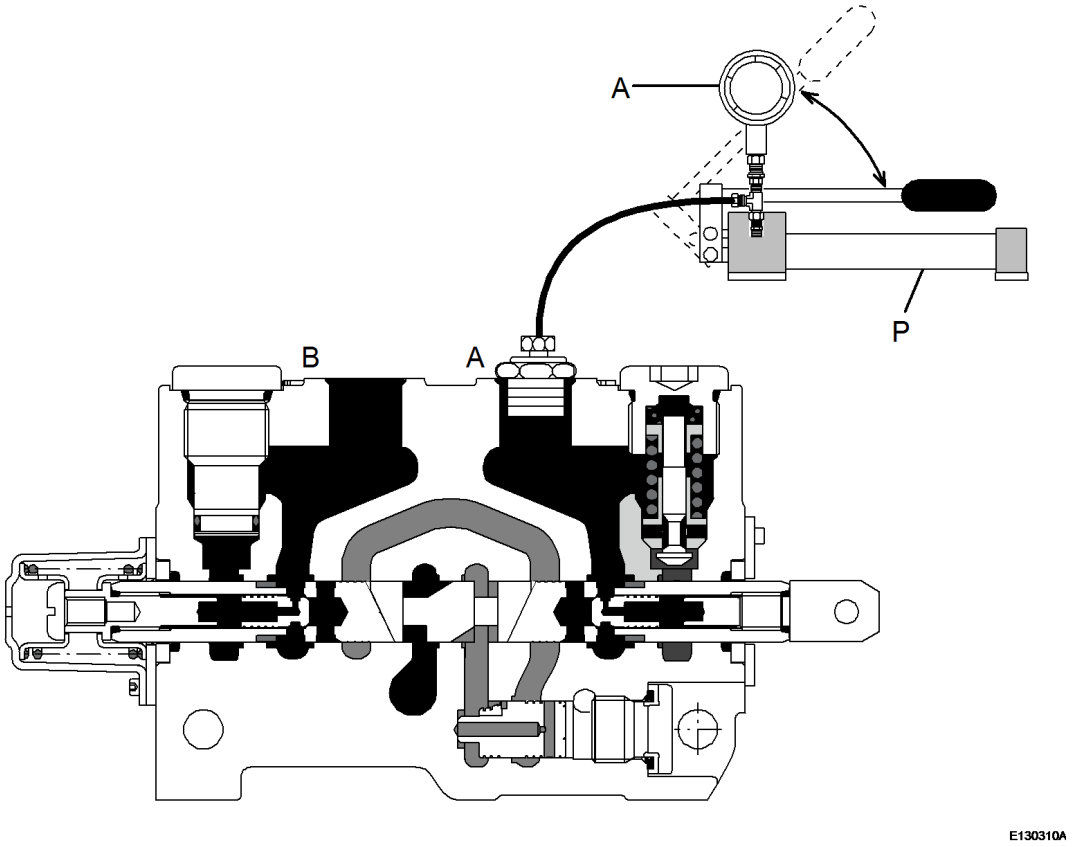

Figure 1

A Pressure gauge
P Pump

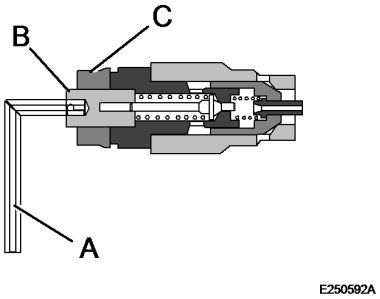

Figure 2

1 Secondary pressure relief valve

A Allen key
B Screw
C Counter nut

Adjustment

The pressure depends on the secondary pressure relief valve (1).
Remove the plastic cap from the secondary pressure relief valve. Slacken counter nut (C) and turn screw (B) with an Allen key (A) to adjust.
See technical data for adjustment value.
Turn screw (B) clockwise to INCREASE the pressure.
Turn screw (B) anti-clockwise to REDUCE the pressure.
Tighten counter nut (C) with 6 Nm while holding screw (B) with Allen key (A).

NOTE!

Repeat this procedure on each secondary pressure relief valve.

WARNING

The secondary pressure relief valves must only be checked and adjusted by appropriately trained VOLVO service engineers, who are fully acquainted with the machine. If any settings are changed by persons who are not authorized for this work, the warranty will become null and void. During work all safety regulations must generally be observed.

The pressure setting of the high pressure relief valve must under no circumstances be raised in order to adjust the secondary pressure relief valve.

Increasing the pressure setting of the main pressure relief valve just for the purpose of adjusting the secondary pressure relief valve can be very dangerous and cause bursting of the hydraulic circuit.

The adjustment of the secondary pressure relief valve must only be performed with the help of a hand pump.

Document Title:	Function Group:	Information Type:	Date:
Assembling the valve block	**912**	**Service Information**	**2014/4/3 0**
Profile:			

Assembling the valve block

Op nbr

CAUTION

No sealing compound or grease must be used between the elements. The sealing faces must be free of oil.

1. Replace all O-rings.

2. Slide all elements over the four connecting rods and observe the correct sequence of the elements.
   NOTE!
   The individual elements should be assembled on a levelling table.

3. Assemble the nuts ([Invalid linktarget] /1) and tighten crosswise with 25 Nm.
   The disassembly and assembly methods for a control valve and the tightening torques are the same for all elements. For tightening torques refer to the following illustration.

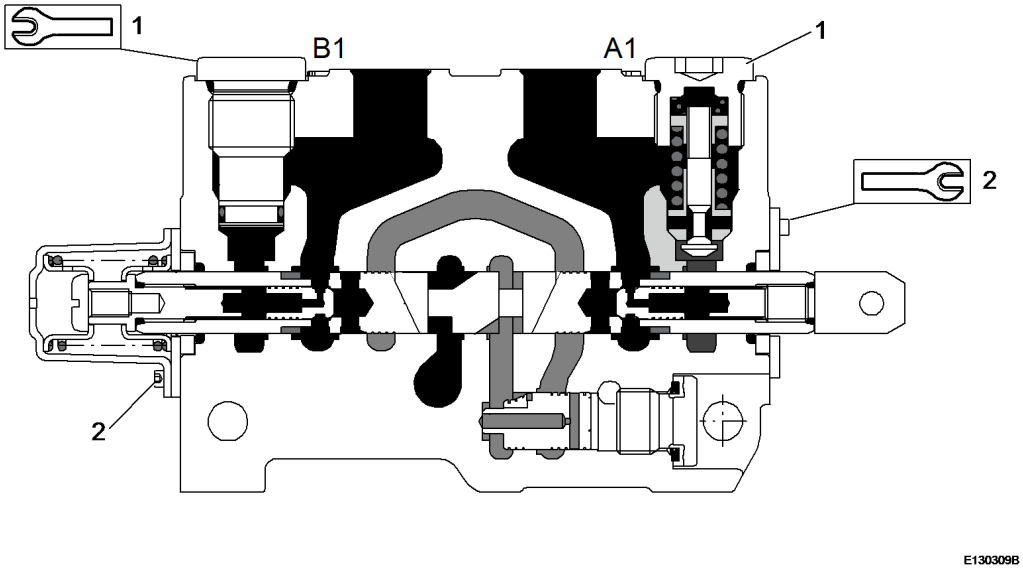

Figure 1
Tightening torques for screw connections

1. 70 Nm
2. 6 Nm

Document Title:	Function Group:	Information Type:	Date:
Checking and adjusting the breaker (volumetric capacity)	**912**	**Service Information**	**2014/4/3 0**
Profile:			

Checking and adjusting the breaker (volumetric capacity)

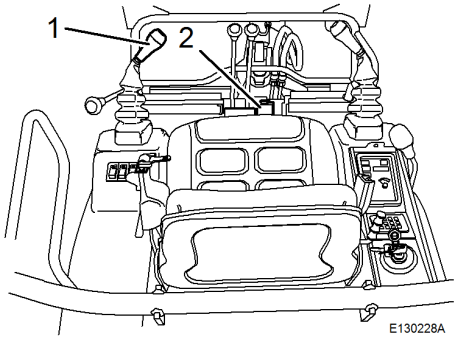

Figure 1

Measurement

Start the engine and accelerate to maximum speed. Kick pedal option (2) fully down and check the max. pump flow rate. The flow meter ([Invalid linktarget] /3) must show a flow rate of 28 ± 3 l.

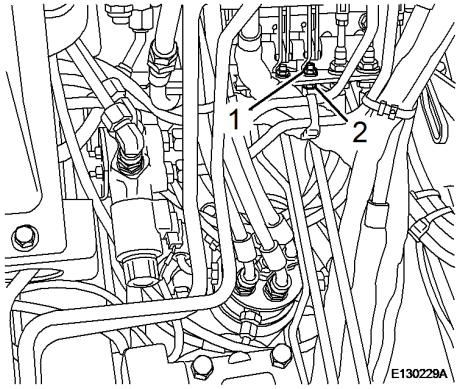

Figure 2

Adjustment

Remove the floor plates from the cabin.
Check the play on pedal option ([Invalid linktarget] /2), adjust if necessary.
Loosen counter nut (1) and adjust screw (2) until a play of 0.5 mm between screw and contact face is reached. Tighten the counter nut.

Document Title: **Dismantling the valve block**	Function Group: **912**	Information Type: **Service Information**	Date: **2014/4/3 0**
Profile:			

Dismantling the valve block

Op nbr

1. Lay the valve block on a levelling table.
2. Unscrew nuts (1).
3. Mark and remove all elements.
4. Check all elements, replace if necessary.

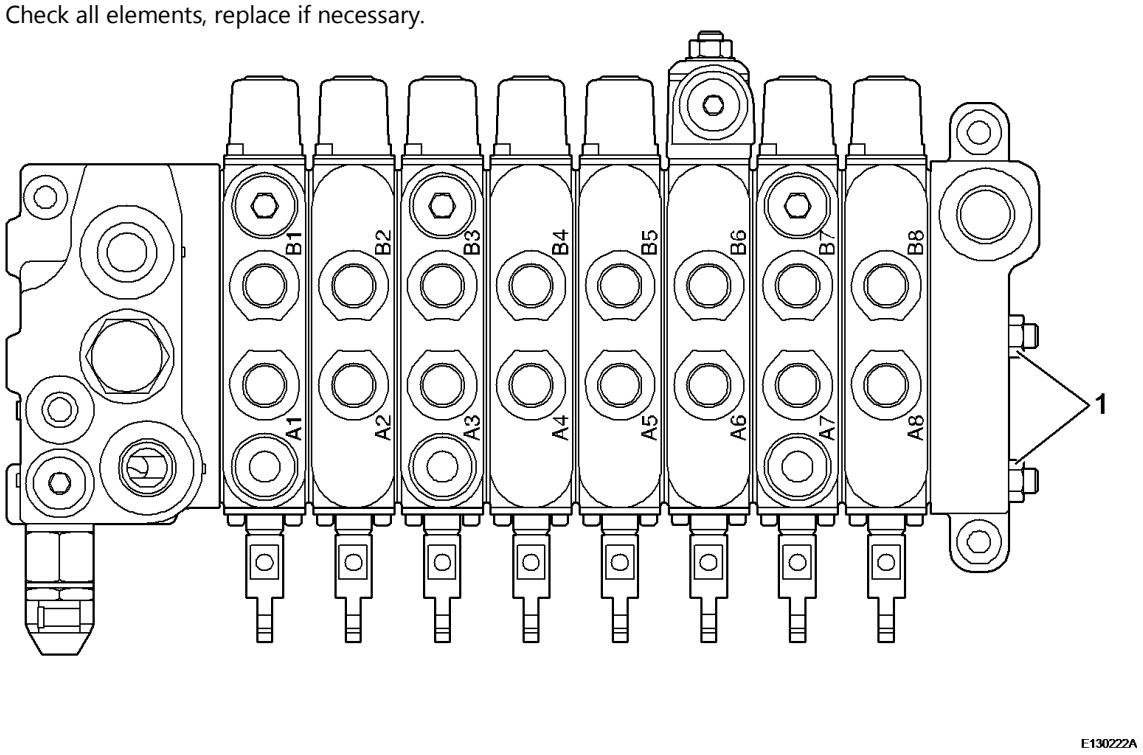

Figure 1

VOLVO
Construction Equipment

Service Information

Document Title:	Function Group:	Information Type:	Date:
Hose rupture valve on boom cylinder	**912**	**Service Information**	**2014/4/3 0**
Profile:			

Hose rupture valve on boom cylinder

The hose rupture valve has the function to prevent the boom from dropping down and causing an accident in case of a pipe or hose failure. It also prevents creeping of the boom cylinder caused by internal leaks in the control valve block.

WARNING

In case of a hose or pipe rupture do not remove the safety valve. In case of a problem consult your authorized dealer or the sales subsidiary of VOLVO.

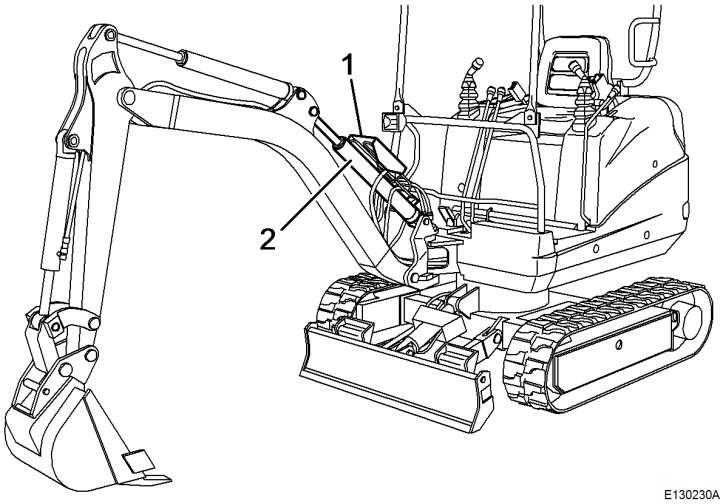

Figure 1

1. Hose rupture valve
2. Boom cylinder

Hose rupture valve on boom cylinder

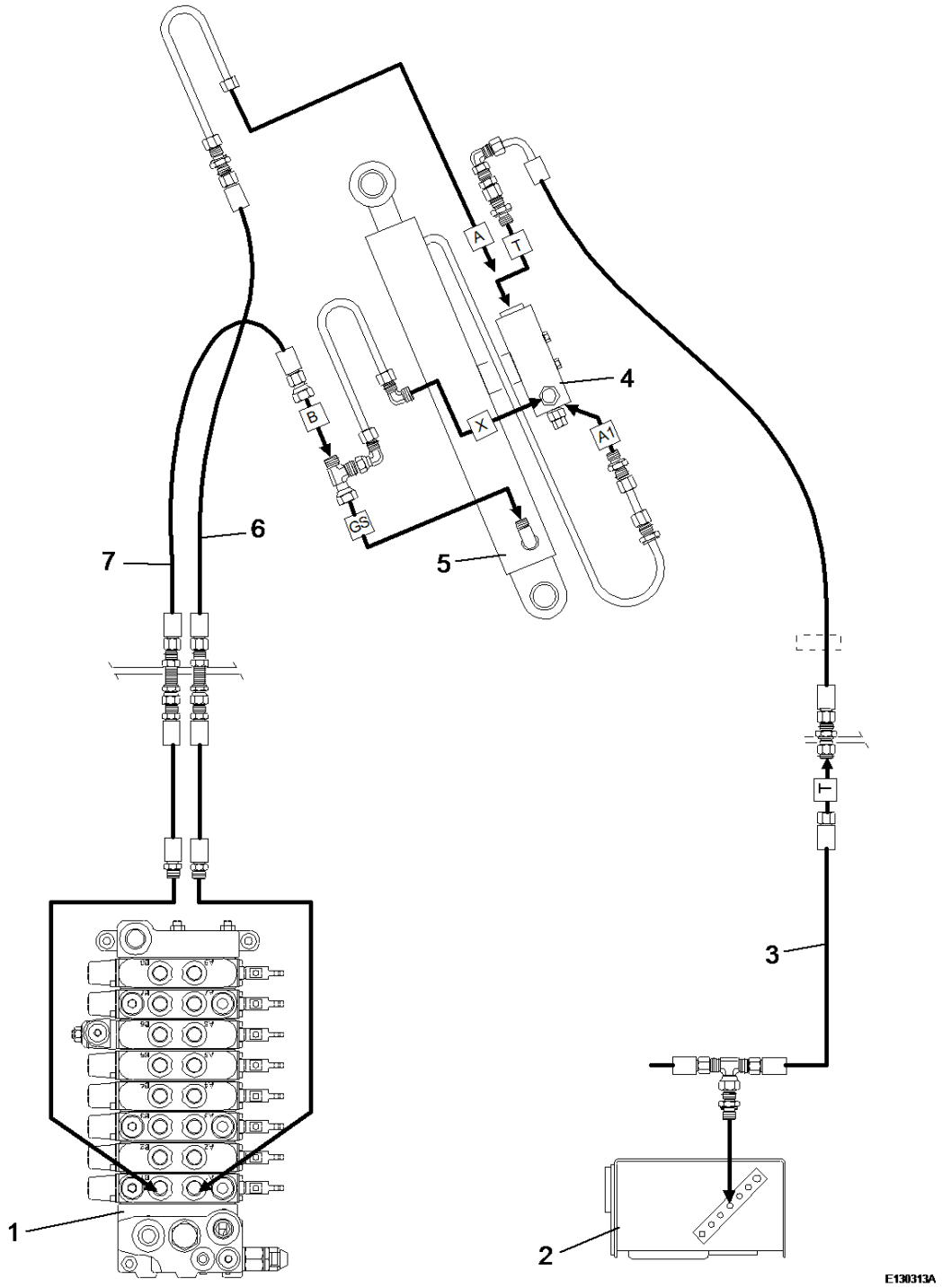

Figure 2

1 Oil distributor
2 Hydraulic oil tank
3 Tank return line
4 Hose rupture valve
5 Boom cylinder
6 Line - down
7 Line - up

Document Title:	Function Group:	Information Type:	Date:
Hose rupture valve on boom cylinder Test and adjustment procedure	**912**	**Service Information**	**2014/4/3 0**
Profile:			

Hose rupture valve on boom cylinder Test and adjustment procedure

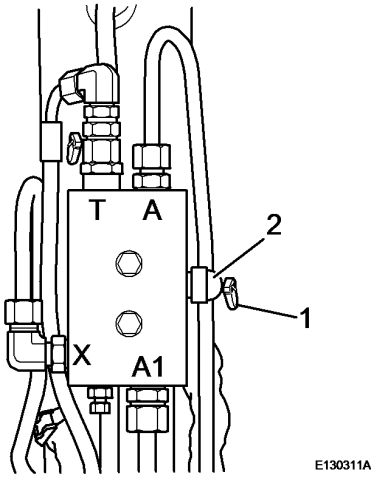

Figure 1

Lowering the boom

Remove seal (1). Pull off cap (2).

Slacken counter nut (1) SW13. Back out socket head cap screw (2) SW4 by two anti-clockwise turns.
Lower the boom so that the working attachment rests on the ground.
Tighte socket head cap screw (2) clockwise with 6 Nm.
Tighten the counter nut with 6 Nm. Plug on cap ([Invalid linktarget] /2) and seal ([Invalid linktarget] /1).

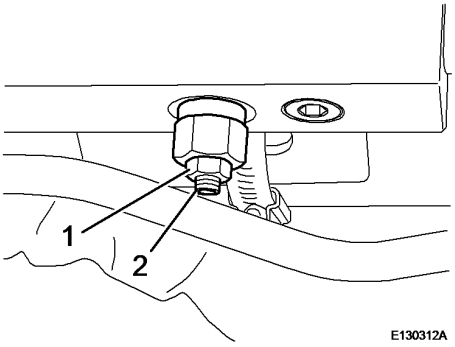

Figure 2

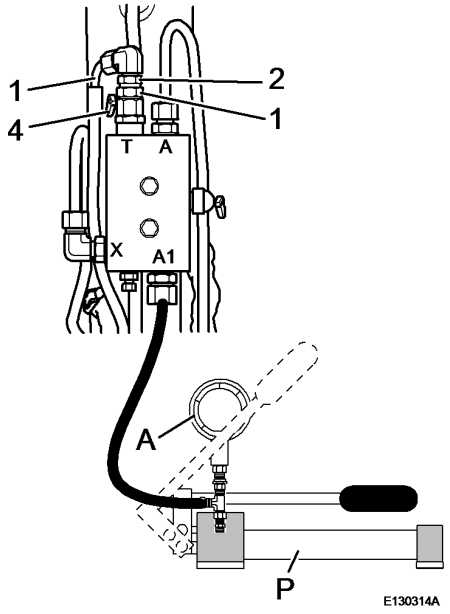

Figure 3

Preparations to adjust the safety valve

Op nbr

1. Unscrew screw fitting from port A1 ([Invalid linktarget]).

2. Connect hand pump (P) with pressure gauge to port A1 on the hose rupture valve.
   NOTE!
   Pressures must be checked at a flow rate of 5 l/min. After the adjustment the valves must be sealed again

Adjusting the safety valve

Op nbr

1. Disconnect hose ([Invalid linktarget] /1) from port T.

2. Remove seal ([Invalid linktarget] /4).

3. Unscrew screw fitting ([Invalid linktarget] /2).

4. Unscrew connecting cap ([Invalid linktarget] /3) SW 19.

5. Operate the hand pump ([Invalid linktarget] /P) to increase the pressure to 250 bar, no oil must run out of port ([Invalid linktarget] /T).
   Increase the pressure to 265 bar, oil may now emerge from port ([Invalid linktarget] /T).
   WARNING
   The pressure should not rise any higher, even when keeping on pumping.

6. In order to increase the pressure turn setscrew in clockwise direction, turn anti-clockwise to reduce the pressure (Allen key 5 mm)

7. Screw on connection cap ([Invalid linktarget] /3) and tighten with 28 Nm.

8. Turn fitting ([Invalid linktarget] /2) back in.

9. Connect hose ([Invalid linktarget] /1) to port T.

10. Secure the connection cap with a seal ([Invalid linktarget] /4).

Document Title:	Function Group:	Information Type:	Date:
Installing the valve block	**912**	**Service Information**	**2014/4/3 0**
Profile:			

Installing the valve block

Op nbr

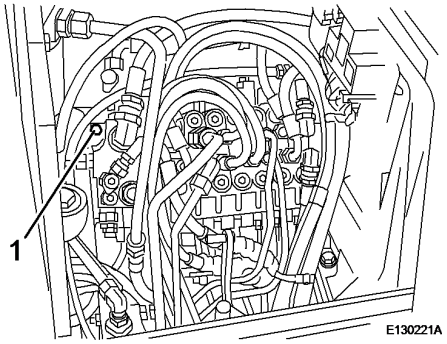

Figure 1

1. Fasten the valve block with the 3 screws (1) to the plate and tighten with 51...61 Nm.
2. Tighten all fittings and lines with the tightening torques specified in the technical data chapter 0 Volvo standard tightening torques, page 18.
3. Connect the control linkage.
4. Check hydraulic oil level ([Invalid linktarget]), top up if necessary

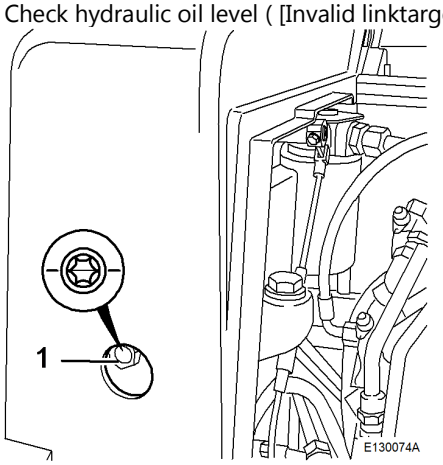

Figure 2
Hydraulic oil level

5. Fold down and push back the seat.
6. Move the attachment control levers slowly to both directions to perform all working movements, check for leaks.

7. Check the hydraulic oil level in the inspection glass (1), it must reach the level shown in the illustration. Top up oil if necessary.

VOLVO
Construction Equipment

Service Information

Document Title:	Function Group:	Information Type:	Date:
Leak test on boom cylinder	**912**	**Service Information**	**2014/4/3 0**
Profile:			

Leak test on boom cylinder

Preparation

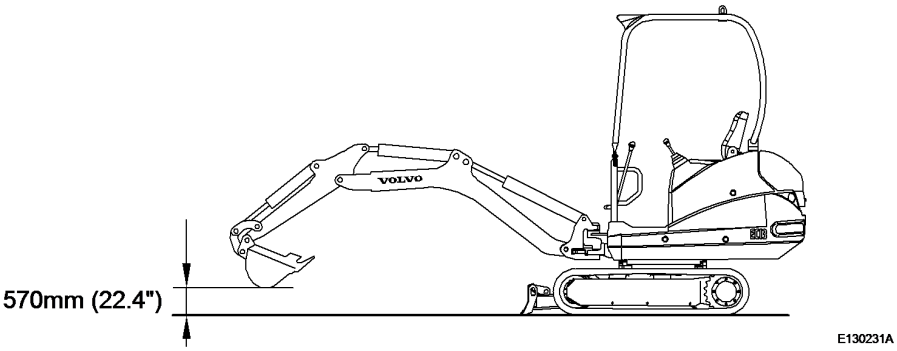

Figure 1
Measuring conditions, creeping

- With the bucket fully loaded adjust the front digger as shown below.

Measurement

- Shut the engine down.
- Measure the distance of the cylinder fastening bolts.
- Repeat the measurement after 5 minutes and check how far the cylinder has retracted.
  Permissible values, see [Invalid linktarget]

Creeping value, unit: mm/5 min.

	Standard	**Permissible value**	**Limit**
Boom cylinder	Less than 4.0	6.0	8.0

Document Title:	Function Group:	Information Type:	Date:
Removing the valve block	**912**	**Service Information**	**2014/4/3 0**
Profile:			

Removing the valve block

Op nbr

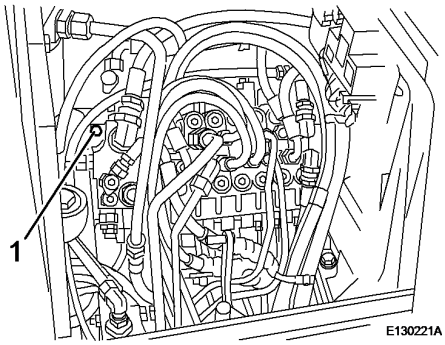

Figure 1

1. Lower the working attachment to the ground.
2. Shut down the engine and move the control levers for boom, arm, dipper, bucket and accessories to all directions and relieve remaining pressure.
3. Slide the seat fully forward and lift up the seat console until the safety bracket clicks into place.
4. Mark and disconnect all pipes and hoses.
   NOTE!
   Close all lines and openings withz clean caps and plugs.
5. Mark and disconnect the control linkage from the valve block.
6. Loosen and remove the three screws (1) holding the block on the plate.
7. Remove the valve block and lay it on a table.

Document Title:	Function Group:	Information Type:	Date:
Tests and adjustments of the power control	**912**	**Service Information**	**2014/4/3 0**
Profile:			

Tests and adjustments of the power control

Test

Remove the cap from pressure test ports (P) and connect a pressure tester.

Connect a flow meter (3) to attachment lines (2) and to the dipper arm cylinder supply line (1) (piston side).

Connect the return flow line.

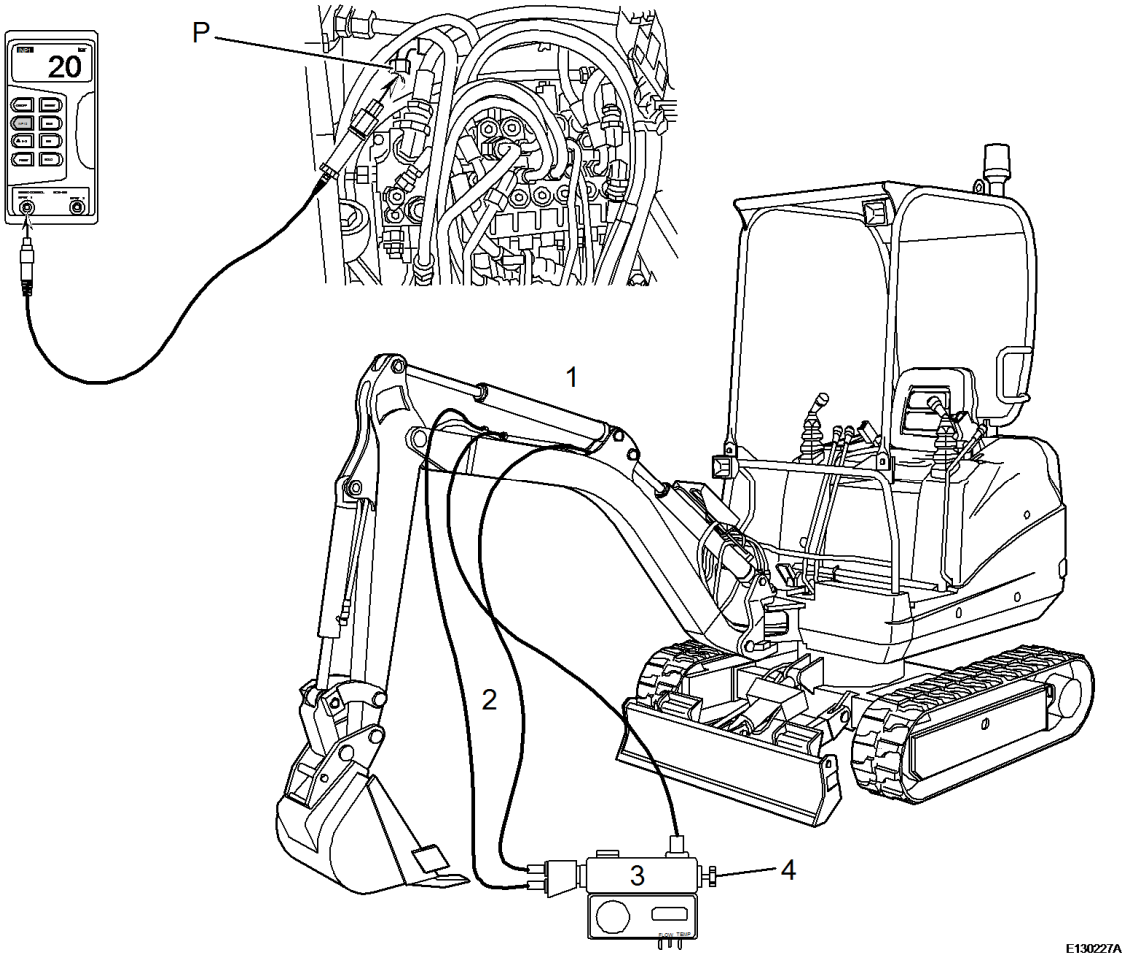

Figure 1

Measurement

Start the engine and accelerate to maximum speed.
Fully open the tap, the pressure on pressure tester port P 31 l/min must be 50 bar.

CAUTION

Please proceed as described below. Never adjust the pressure first and then the flow rate.

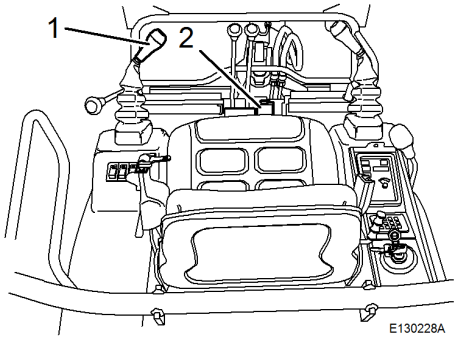

Figure 2

NOTE!
The hydraulic oil temperature in the hydraulic oil tank must be 50 °C to 60 °C.

Start the engine and accelerate to maximum speed.

Perform two movements to the respective end positions, attachment line ([Invalid linktarget] /2) and dipper arm cylinder ([Invalid linktarget] /1) must be included in this movement. Kick pedal option (2) fully forward while pulling control lever (1) back and check the maximum pump power. The flow meter must show a flow rate of 31 l.

If the flow rate of 31 l is not reached, both dipper arm cylinder and option must be checked and adjusted individually.

If necessary adjust the pressure.

Document Title:	Function Group:	Information Type:	Date:
Solenoid valve for hydraulic working unit	**912**	**Service Information**	**2014/4/3 0**
Profile:			

Solenoid valve for hydraulic working unit

Solenoid valve for slewing gear / offset

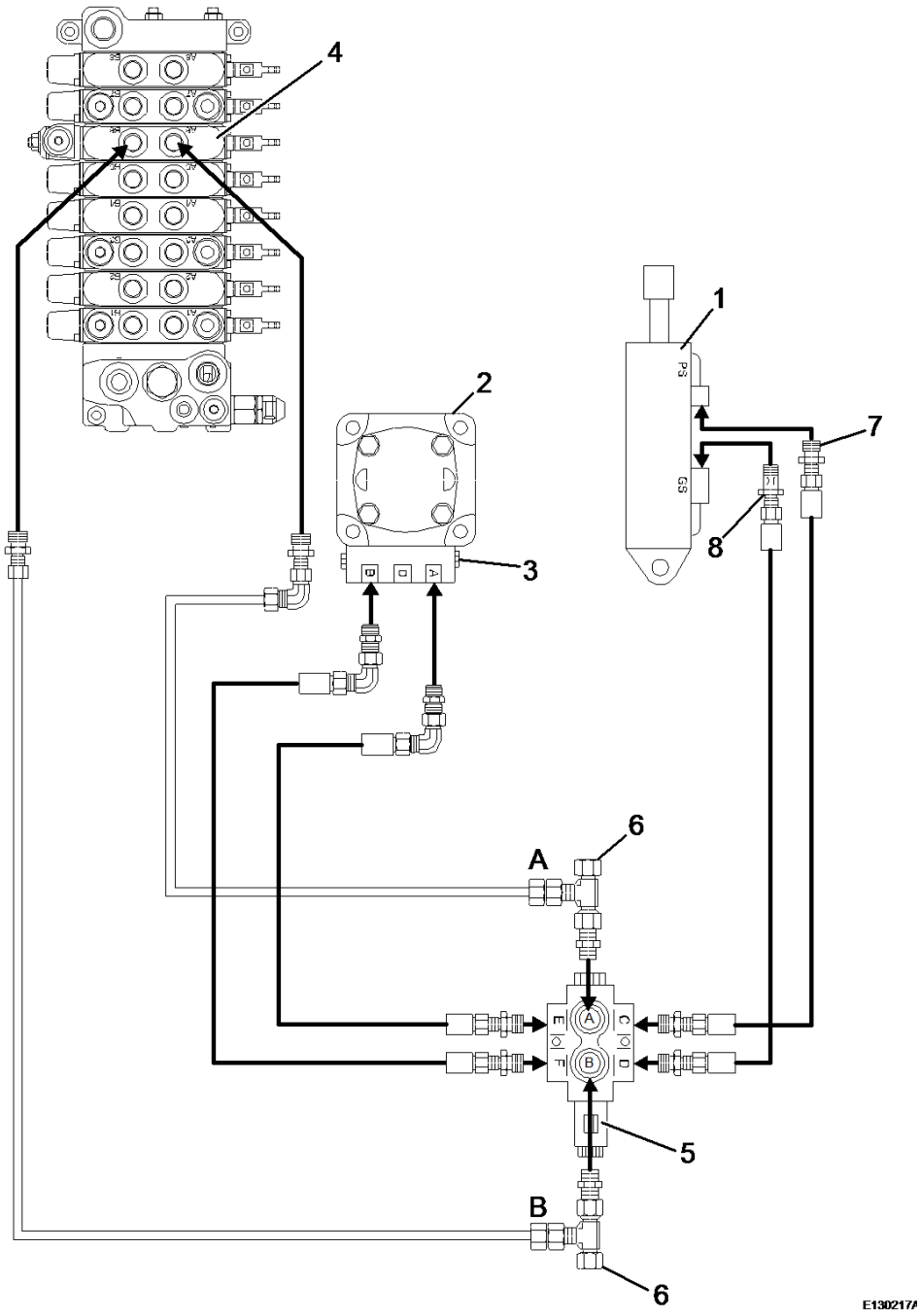

Figure 1

1 Offset cylinder
2 Hydraulic slewing gear motor
3 Control valve for slewing gear / crossover valve
4 Control element / slewing gear - offset cylinder
5 Solenoid valve for slewing gear - offset
6 Pressure test port
7 Piston rod side (retract cylinder)
8 Piston side (extend cylinder)

Function

The offset cylinder is controlled by the left-hand control lever, similar to the slewing movement. Operation of the button "Slewing or Offset" changes the function of the control lever, as follows:
Operation "Offset attachment" or "Slewing movement chassis".

"A" solenoid valve (5) dead.
Connection from A to E
Connection from B to F
"Operation of the hydraulic slewing gear motor".

"B" solenoid valve (5) live (>9 Volt)
Connection from A to D
Connection from B to C
"Operation of offset cylinder".

Document Title:	Function Group:	Information Type:	Date:
Installing the hydraulic pump	**913**	**Service Information**	**2014/4/3 0**
Profile:			

Installing the hydraulic pump

Op nbr

14360000 Vacuum pump

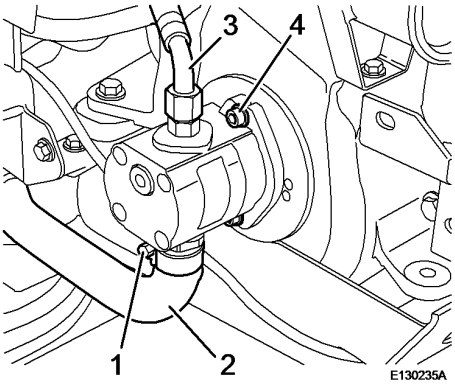

Figure 1

1. Clean mounting surface on flange.

2. Assemble the hydraulic pump, turn in both screws (4) and tighten with 60 ± 10 Nm.
   NOTE!
   Remove all plugs before connecting the hydraulic lines.

3. Connect hydraulic line (3), align it correctly and tighten with 35 Nm.

4. Assemble suction line (2) and fasten with new hose clamp (1).

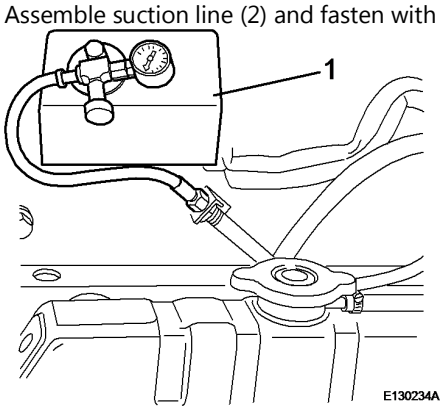

Figure 2

5. Remove vacuum pump (1) and check the hydraulic oil level, top up if necessary.

6. Start the engine, check machine functions and leak tightness, fill up oil if necessary.

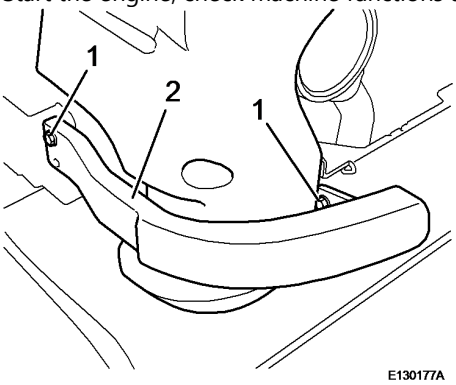

Figure 3

7. Fasten counter weight (2) with screws (1).

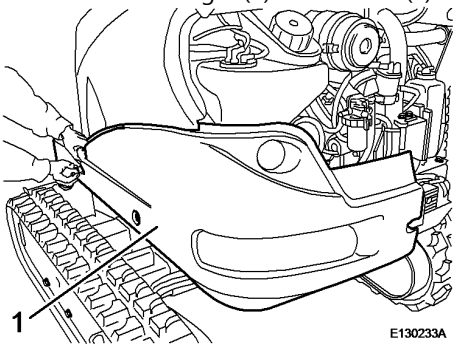

Figure 4

8. Assemble the left hand bottom side casing (1).
9. Assemble the floor plate.
10. Close the engine hood.

Document Title:	Function Group:	Information Type:	Date:
Removing the hydraulic oil pump	**913**	**Service Information**	**2014/4/3 0**
Profile:			

Removing the hydraulic oil pump

Op nbr

14360000 Vacuum pump

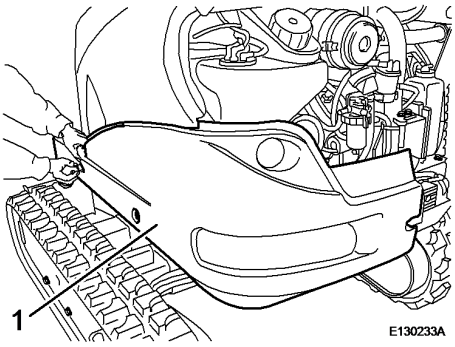

Figure 1

1. Open the engine hood.
2. Disassemble the floor plate.
3. Disassemble the left hand bottom side casing (1).

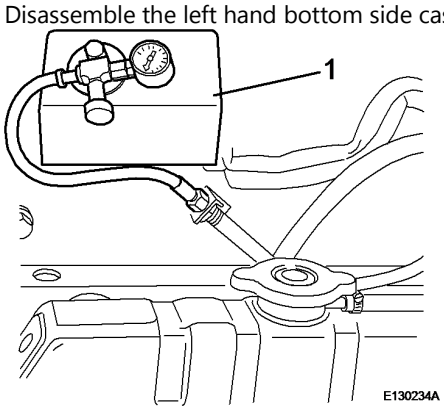

Figure 2

4. Remove the breather and install vacuum pump (1).

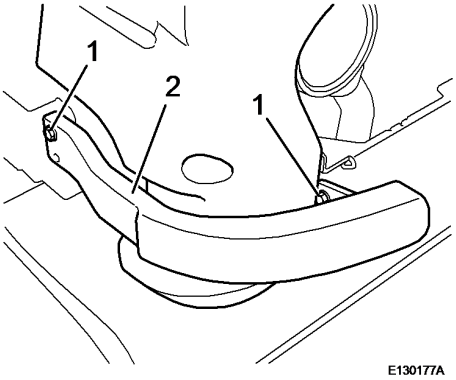

Figure 3

5. Unscrew screws (1) and take off the left hand counter weight (2).

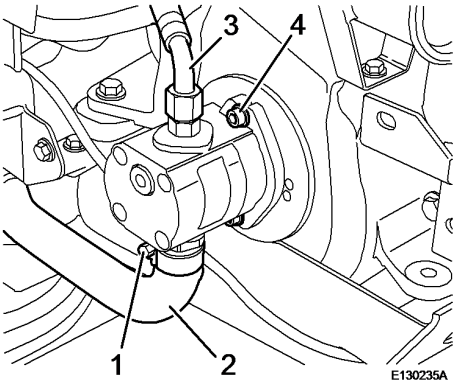

Figure 4

6. Loosen hose clamp (1), remove suction line (2) and close the opening of the suction line with a plug.

7. Unscrew hydraulic line (3) and close with plug.

8. Unscrew fastening screws (4) and remove the hydraulic pump.
   NOTE!
   Check splines on coupling for wear, replace if necessary.

VOLVO
Construction Equipment

Service Information

Document Title:	Function Group:	Information Type:	Date:
Hose rupture valve on boom cylinder	**990**	**Service Information**	**2014/4/3 0**
Profile:			

Hose rupture valve on boom cylinder

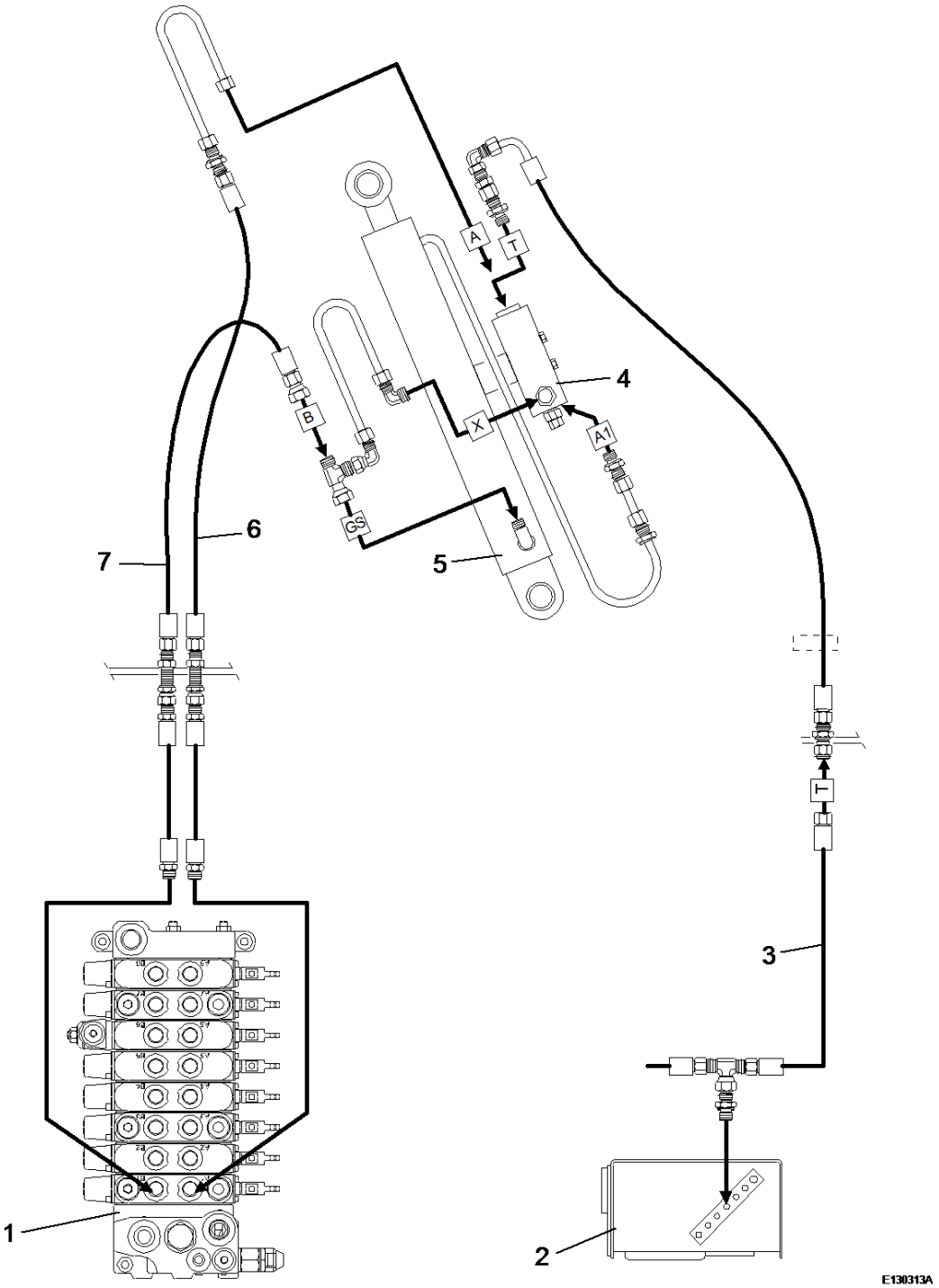

Figure 1

1. Oil distributor
2. Hydraulic oil tank
3. Tank return line
4. Hose rupture valve
5. Boom cylinder
6. Line - down
7. Line - up

Document Title:	Function Group:	Information Type:	Date:
Hydraulic circuit for bucket	**990**	**Service Information**	**2014/4/3 0**
Profile:			

Hydraulic circuit for bucket

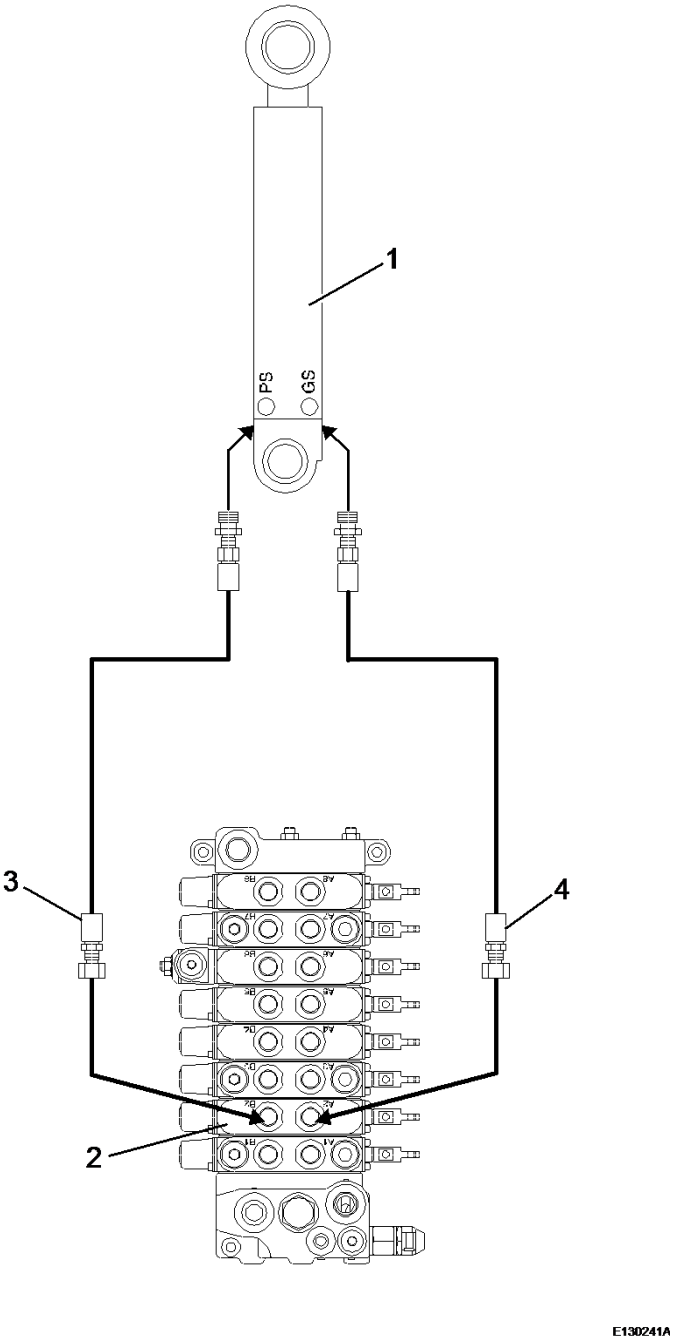

Figure 1

1. Bucket cylinder
2. Bucket cylinder control element
3. Piston rod side (retract cylinder)

4. Piston side (extend cylinder)

Document Title:	Function Group:	Information Type:	Date:
Hydraulic circuit for dozer blade and adjustable track width	**990**	**Service Information**	**2014/4/3 0**
Profile:			

Hydraulic circuit for dozer blade and adjustable track width

EC13 XTV

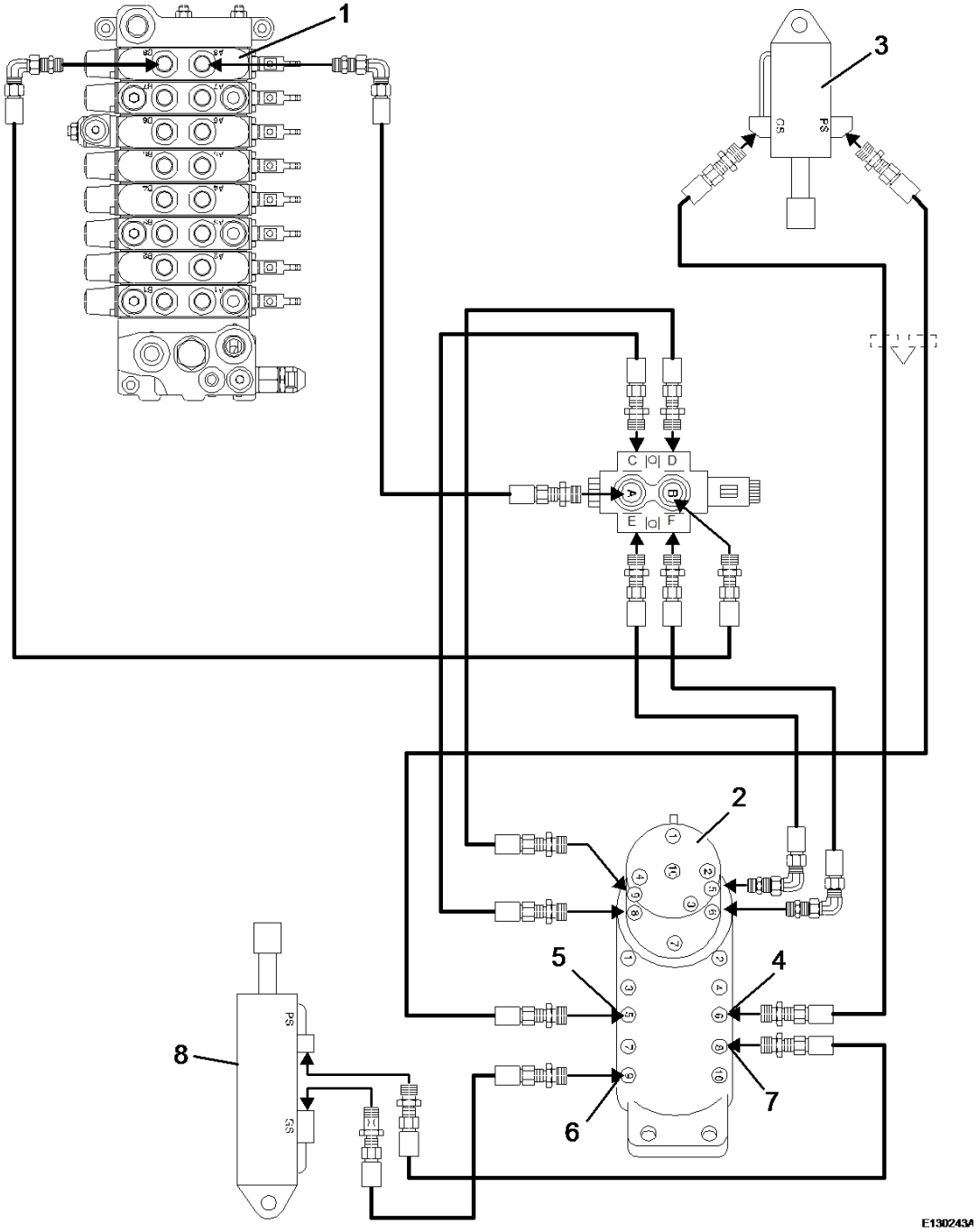

Figure 1

1. Dozer blade control element
2. Rotary oil distributor
3. Dozer blade cylinder
4. Piston side (extend cylinder)
5. Piston rod side (retract cylinder)
6. Piston side (extend cylinder)
7. Piston rod side (retract cylinder)
8. Cylinder for adjustable track width

Document Title:	Function Group:	Information Type:	Date:
Hydraulic circuit, boom	**990**	**Service Information**	**2014/4/3 0**
Profile:			

Hydraulic circuit, boom

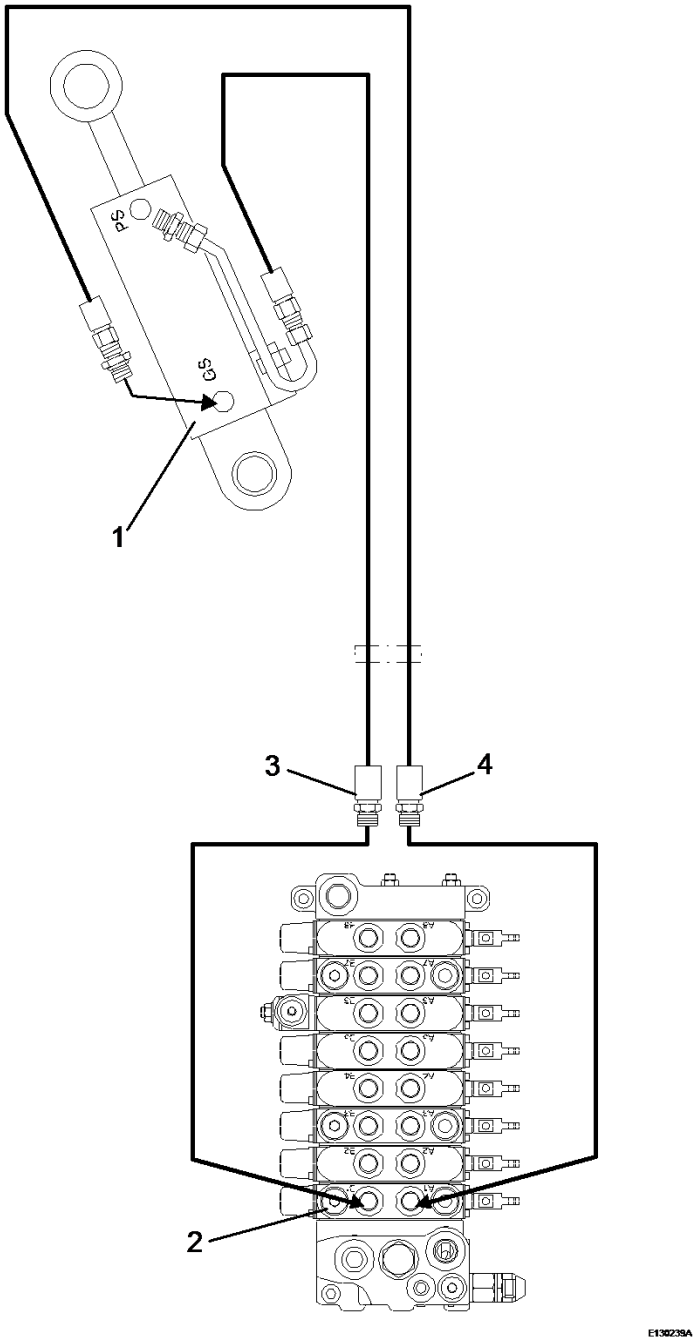

Figure 1

1. Boom cylinder
2. Boom control element
3. Piston rod side (retract cylinder)

4. Piston side (extend cylinder)

Document Title:	Function Group:	Information Type:	Date:
Hydraulic circuit, dipper arm	**990**	**Service Information**	**2014/4/3 0**
Profile:			

Hydraulic circuit, dipper arm

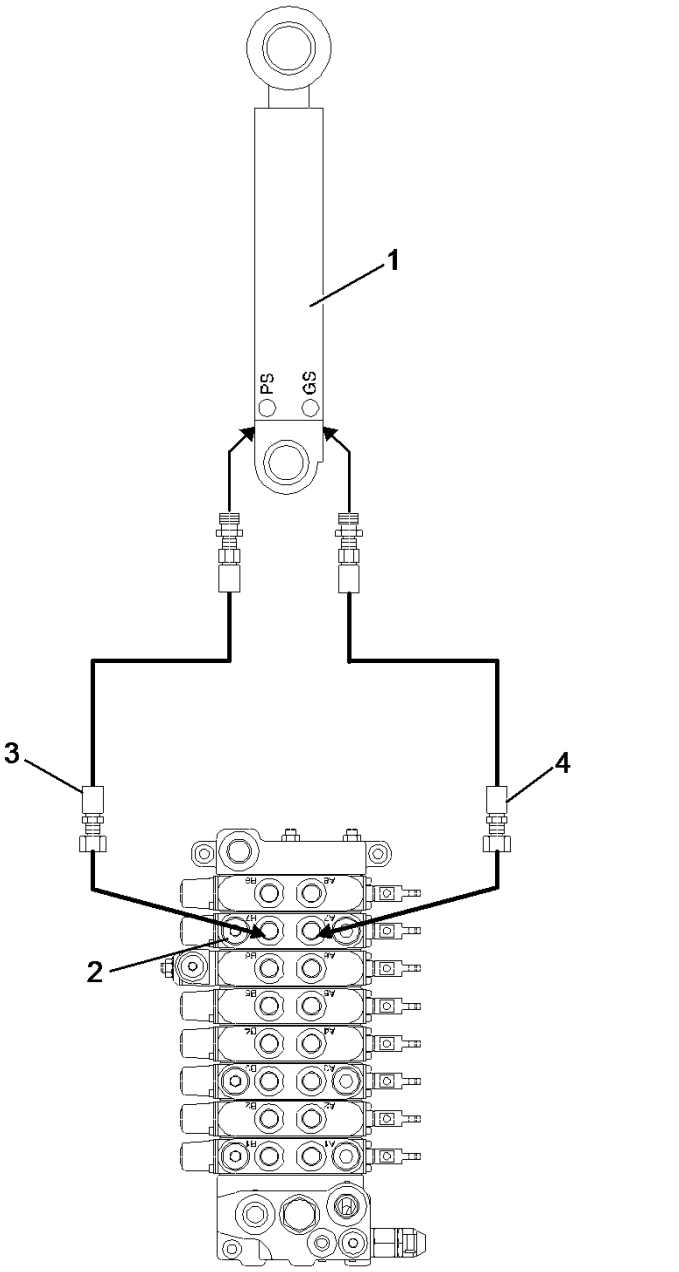

Figure 1

1. Dipper cylinder
2. Control element for dipper arm cylinder

3. Piston rod side (retract cylinder)
4. Piston side (extend cylinder)

Document Title:	Function Group:	Information Type:	Date:
Hydraulic circuit, dozer blade	**990**	**Service Information**	**2014/4/3 0**
Profile:			

Hydraulic circuit, dozer blade

EC13 XR

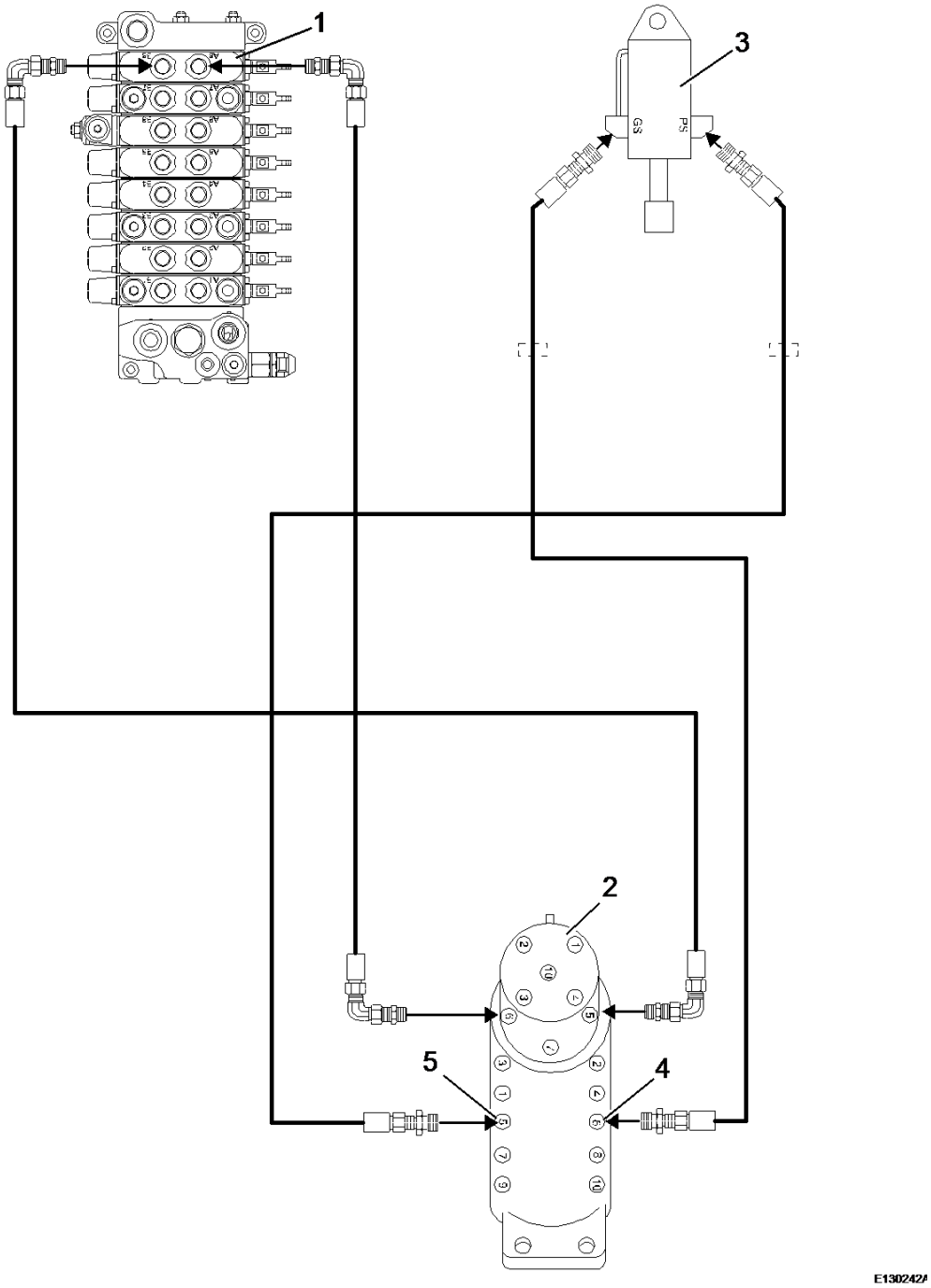

Figure 1

1. Dozer blade control element
2. Rotary oil distributor
3. Dozer blade cylinder
4. Piston rod side (extend cylinder)
5. Piston side (retract cylinder)

Document Title:	Function Group:	Information Type:	Date:
Hydraulic circuit, slewing gear/offset	**990**	**Service Information**	**2014/4/3 0**
Profile:			

Hydraulic circuit, slewing gear/offset

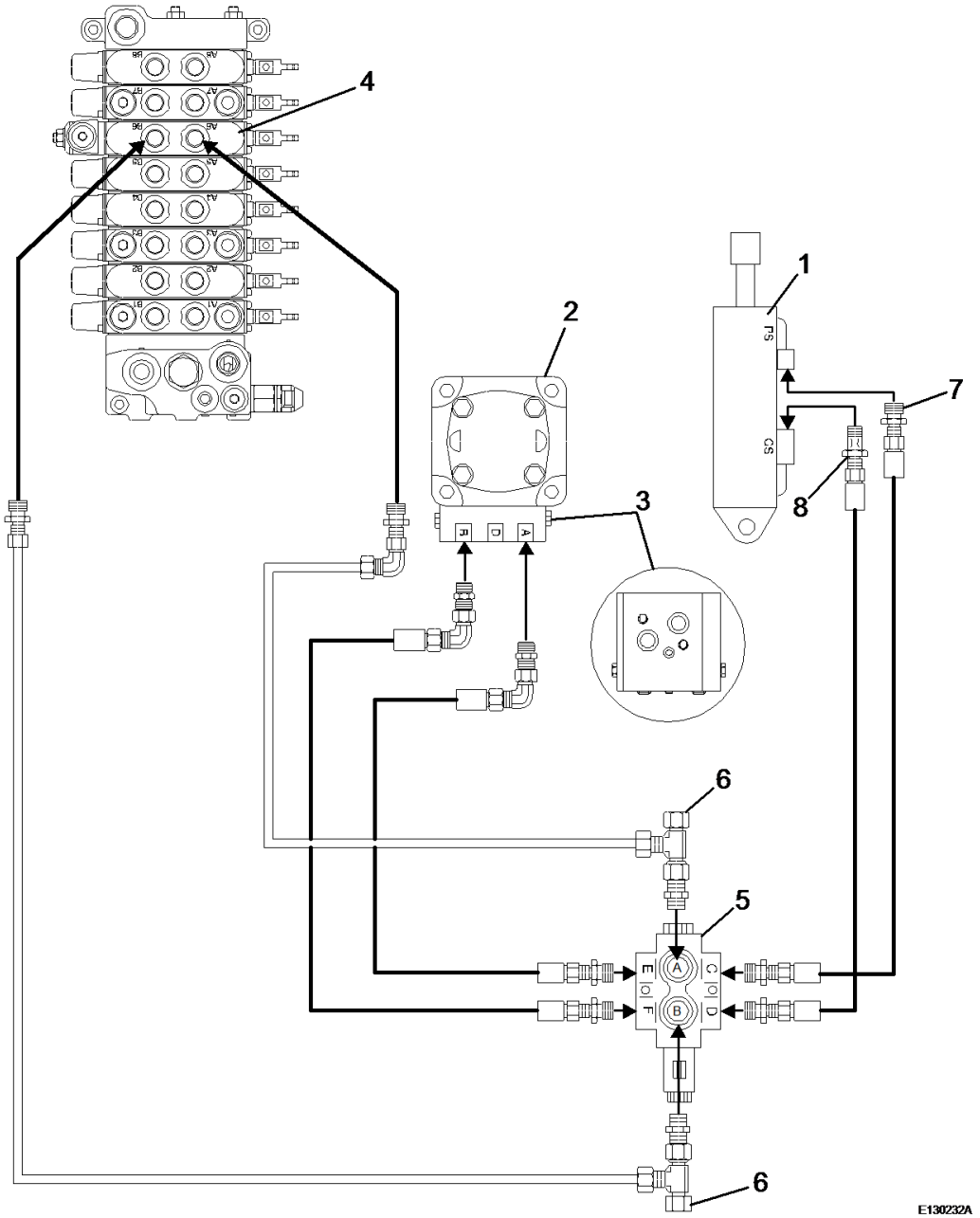

Figure 1

1. Offset cylinder
2. Hydraulic slewing motor
3. Control valve block for slewing gear
4. Control element for slewing gear – offset cylinder

5. Solenoid valve for slewing gear / offset
6. Pressure test port
7. Piston rod side (retract cylinder)
8. Piston side (extend cylinder)

VOLVO
Construction Equipment

Service Information

Document Title:	Function Group:	Information Type:	Date:
Hydraulic circuit, travel system EC13 XR	**990**	**Service Information**	**2014/4/3 0**
Profile:			

Hydraulic circuit, travel system EC13 XR

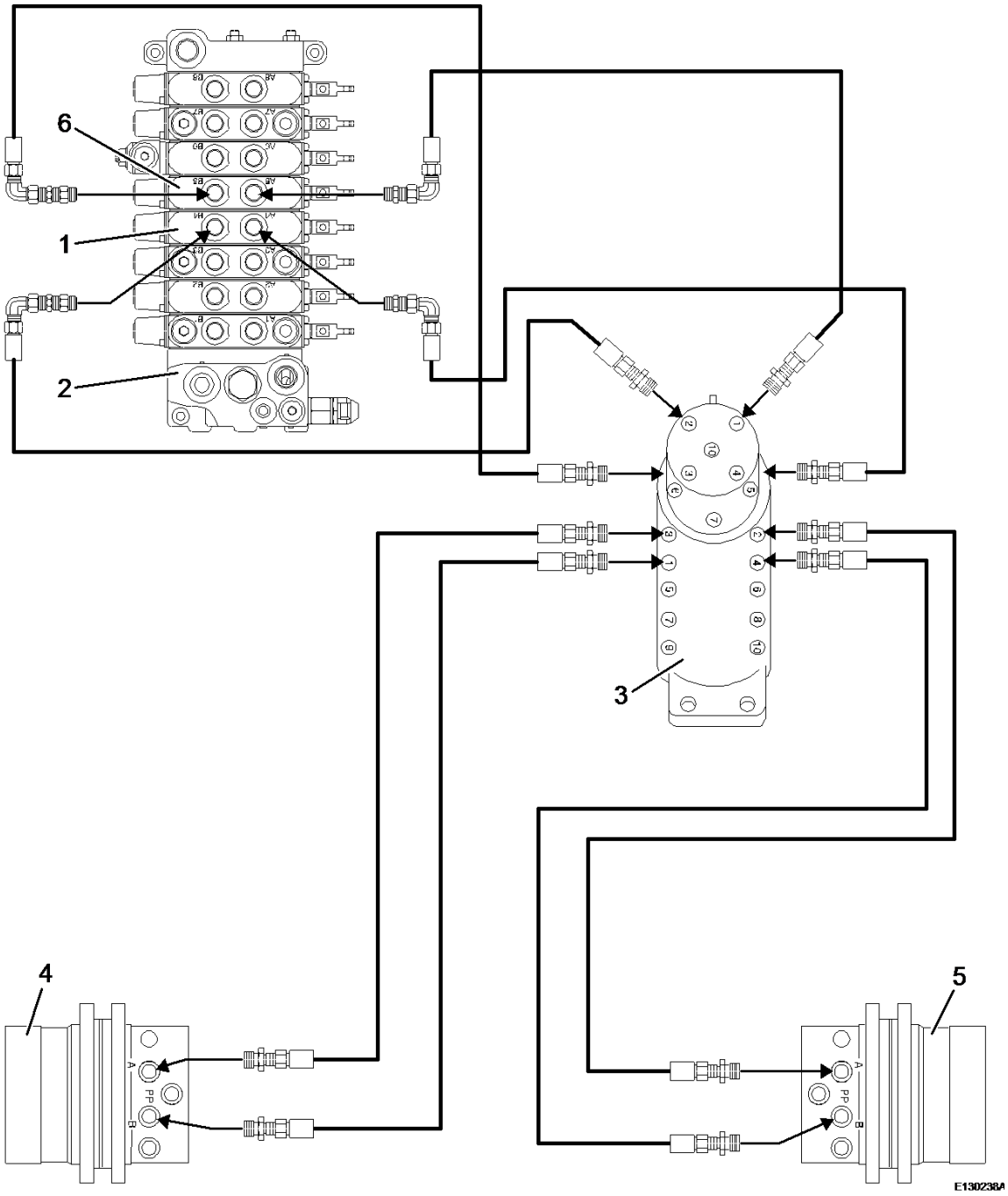

Figure 1

1. Control block element: Left hand travel control
2. Oil distributor

3. Rotary oil distributor
4. Travel gear motor, right hand side
5. Travel gear motor, left hand side
6. Control block element: Right hand travel control.

VOLVO
Construction Equipment

Service Information

Document Title:	Function Group:	Information Type:	Date:
Hydraulic circuit, travel system EC13 XTV	**990**	**Service Information**	**2014/4/3 0**
Profile:			

Hydraulic circuit, travel system EC13 XTV

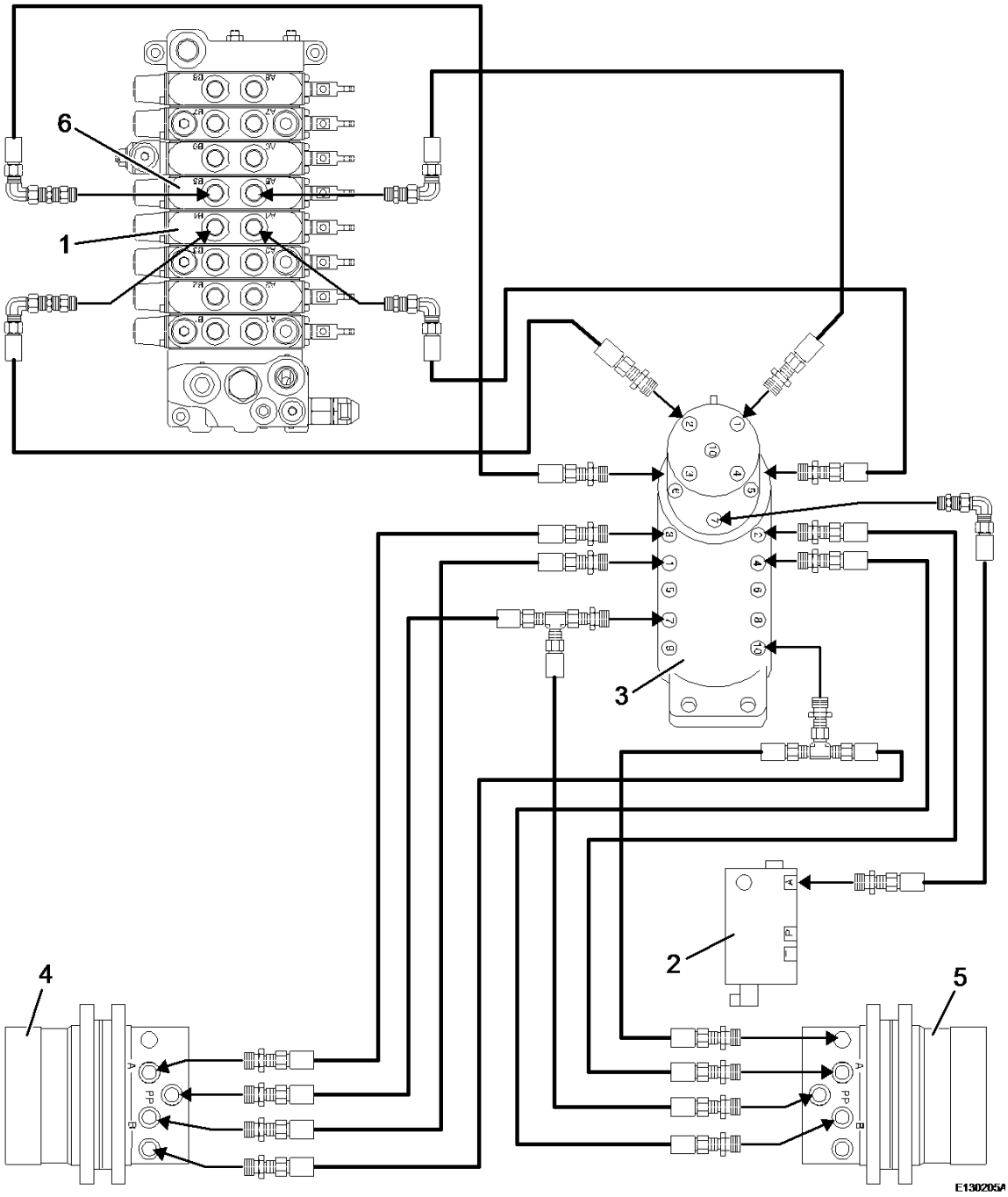

Figure 1

1. Control block element: Left hand travel control
2. Oil distributor

3. Rotary oil distributor
4. Travel gear motor, right hand side
5. Travel gear motor, left hand side
6. Control block element: Right hand travel control

VOLVO

Construction Equipment

Service Information

Document Title:	Function Group:	Information Type:	Date:
Hydraulic diagram EC13 XR	**990**	**Service Information**	**2014/4/3 0**
Profile:			

Hydraulic diagram EC13 XR

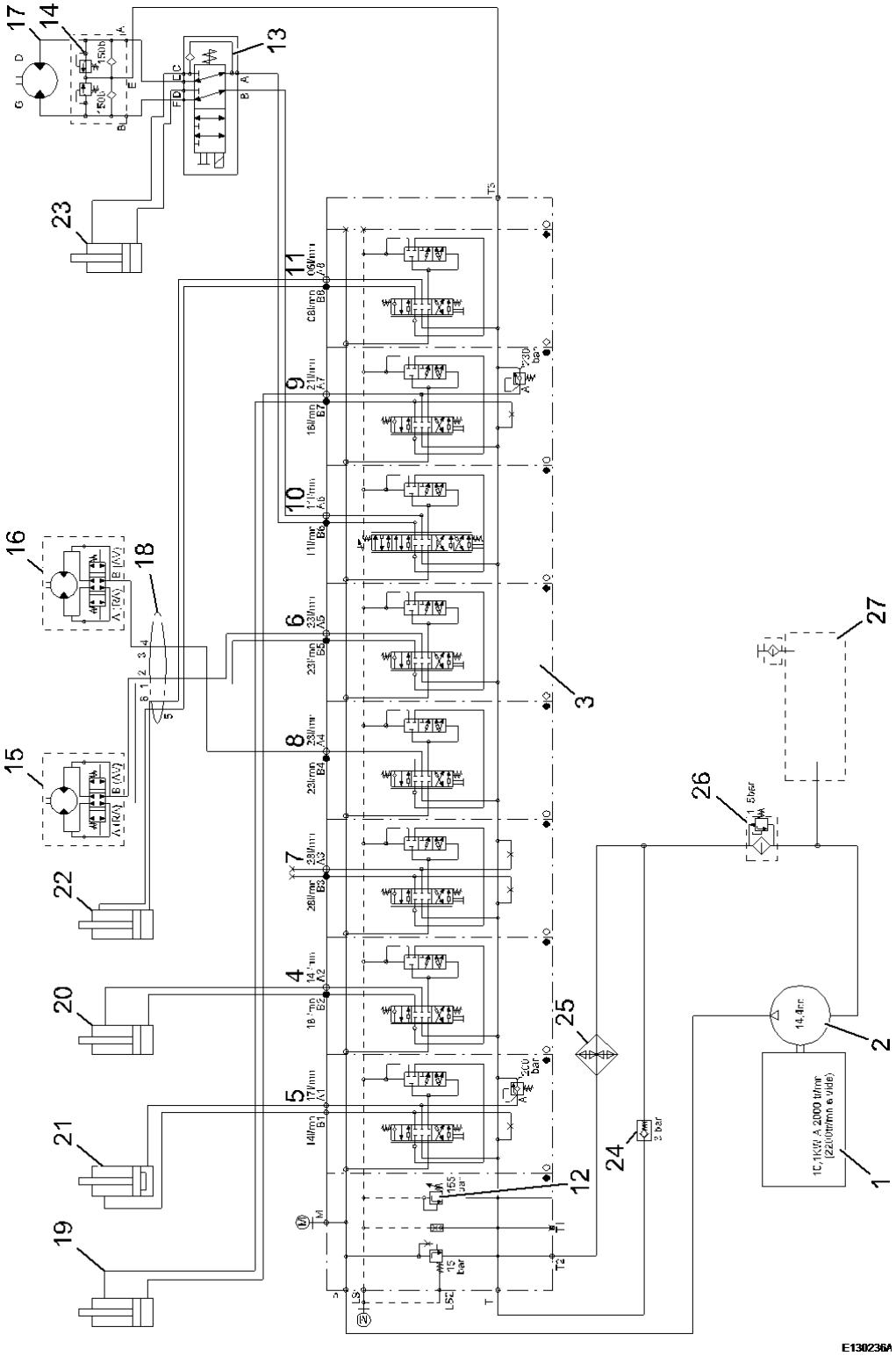

Figure 1

1 Diesel engine
2 Hydraulic pump
3 Oil distributor
4 Control valve for dipper
5 Control valve for boom
6 Control valve for left-hand travel motor
7 Control valve for options
8 Control valve for right-hand travel motor
9 Control valve for dipper arm
10 Control valve for offset / slewing gear
11 Control valve for dozer blade
12 Pressure relief valve
13 Solenoid valve for slewing gear / offset
14 Crossover - valve
15 Hydraulic travel motor, left
16 Hydraulic travel motor, right
17 Hydraulic slewing gear motor
18 Rotary oil distributor
19 Dipper cylinder
20 Bucket cylinder
21 Boom cylinder
22 Dozer blade cylinder
23 Offset cylinder
24 By-pass valve
25 Oil cooler
26 Filter
27 Tank

VOLVO
Construction Equipment

Service Information

Document Title:	Function Group:	Information Type:	Date:
Hydraulic diagram EC13 XTV	**990**	**Service Information**	**2014/4/3 0**
Profile:			

Hydraulic diagram EC13 XTV

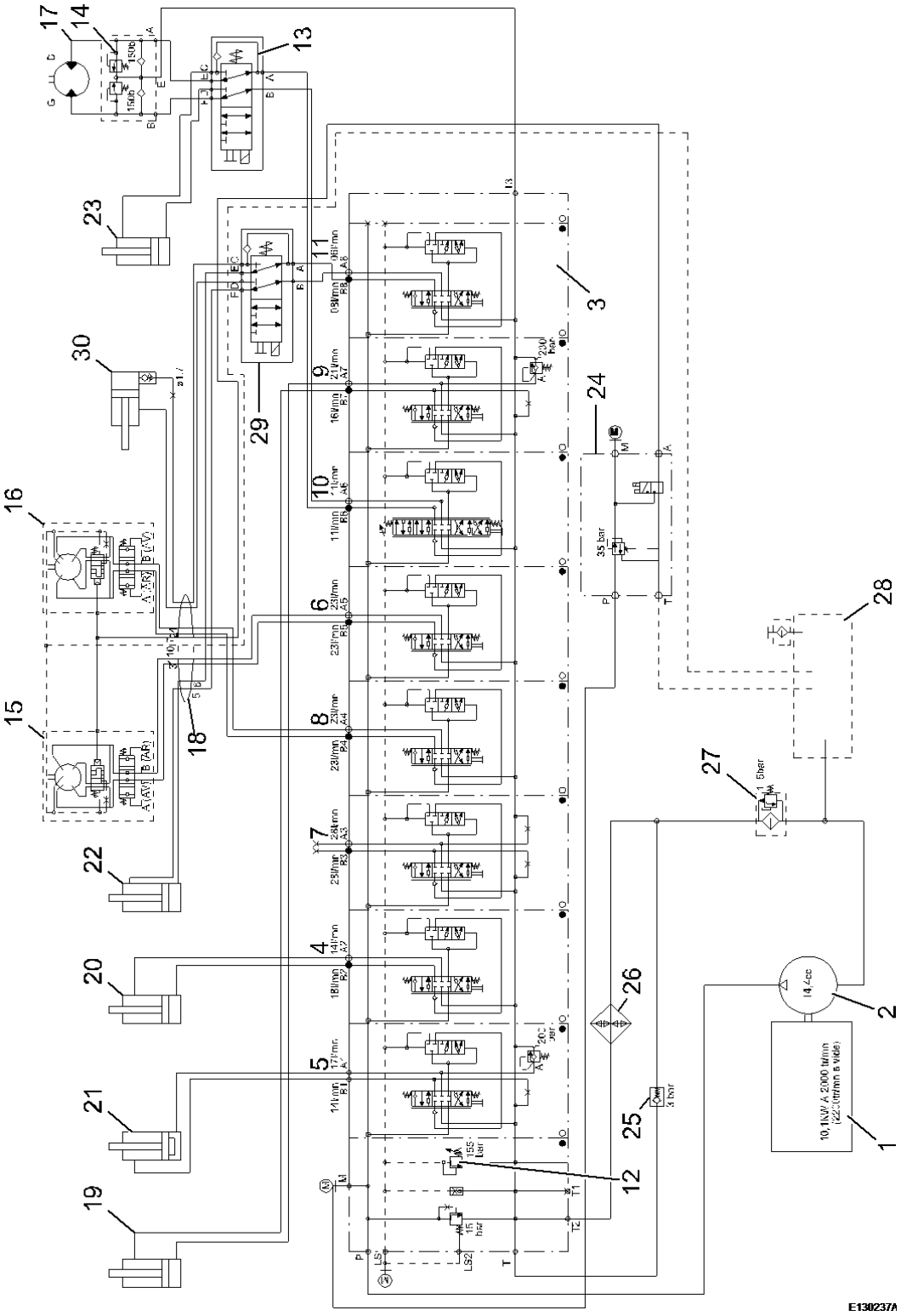

Figure 1

1. Diesel engine
2. Hydraulic pump
3. Oil distributor
4. Control valve for dipper
5. Control valve for boom
6. Control valve for left-hand travel motor
7. Control valve for options
8. Control valve for right-hand travel motor
9. Control valve for dipper arm
10. Control valve for slewing gear / offset
11. Control valve for dozer blade
12. Pressure relief valve
13. Solenoid valve for slewing gear / offset
14. Crossover - valve
15. Hydraulic travel motor, left
16. Hydraulic travel motor, right
17. Hydraulic slewing motor with brake
18. Rotary oil distributor
19. Dipper cylinder
20. Bucket cylinder
21. Boom cylinder
22. Dozer blade cylinder
23. Offset cylinder
24. Solenoid valve high / low speed
25. By-pass valve
26. Oil cooler
27. Filter
28. Tank
29. Selector switch for adjustable track width
30. Cylinder for adjustable track width

VOLVO
Construction Equipment

Service Information

Document Title:	Function Group:	Information Type:	Date:
Hydraulic system, function diagram	**990**	**Service Information**	**2014/4/3 0**
Profile:			

Hydraulic system, function diagram

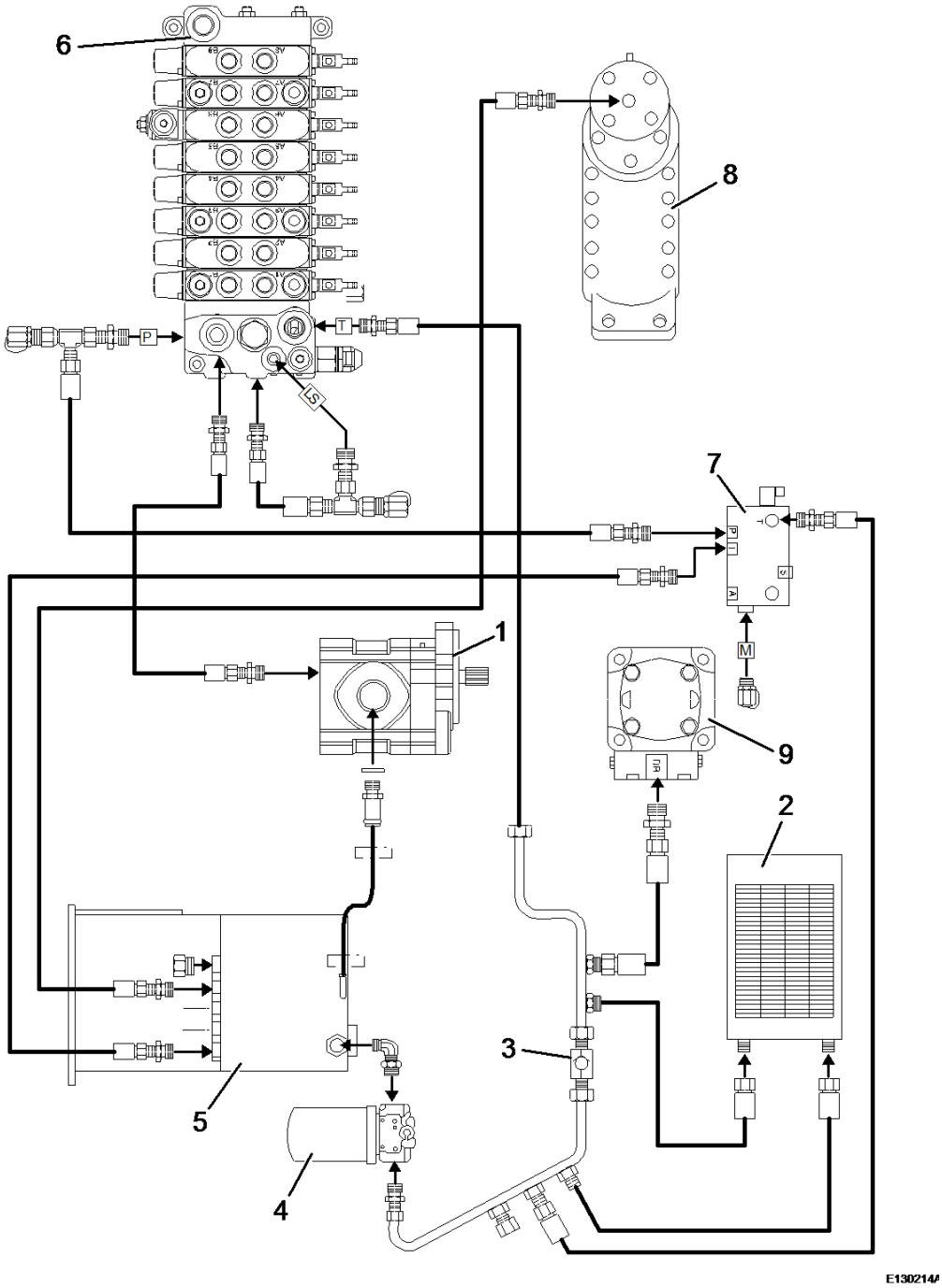

Figure 1

1. Hydraulic pump

2. Oil cooler
3. By-pass valve
4. Oil filter
5. Hydraulic oil tank
6. Control valve block with 8 elements
7. Hydraulic servo valve block
8. Rotary distributor
9. Gear motor

VOLVO
Construction Equipment

Service Information

Document Title:	Function Group:	Information Type:	Date:
Return flow, hydraulic circuit for accessories	**990**	**Service Information**	**2014/4/3 0**
Profile:			

Return flow, hydraulic circuit for accessories

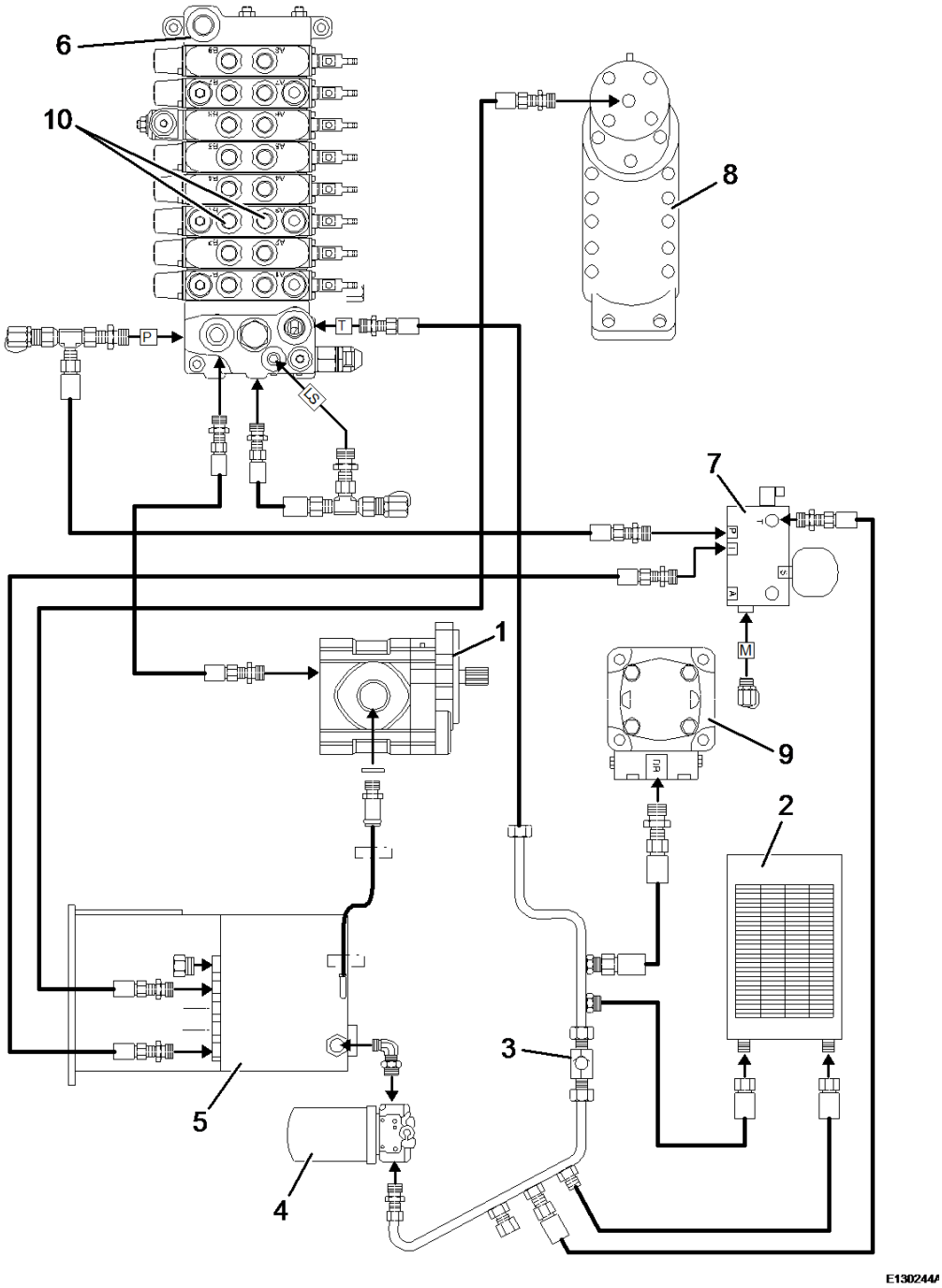

Figure 1

1. Hydraulic pump
2. Oil cooler
3. By-pass valve
4. Oil filter
5. Hydraulic oil tank
6. Control valve block with 8 elements
7. Hydraulic servo valve block
8. Rotary oil distributor
9. Gear motor
10. Accessory connections

Many thanks for your purchase.
Happy every day.